SERVICE MANUAL

DIGITAL COMPACT DISC PLAYER WITH RAD-Z1 WIRELESS REMOTE CONTROL

AD-Z1

(EUROPE)

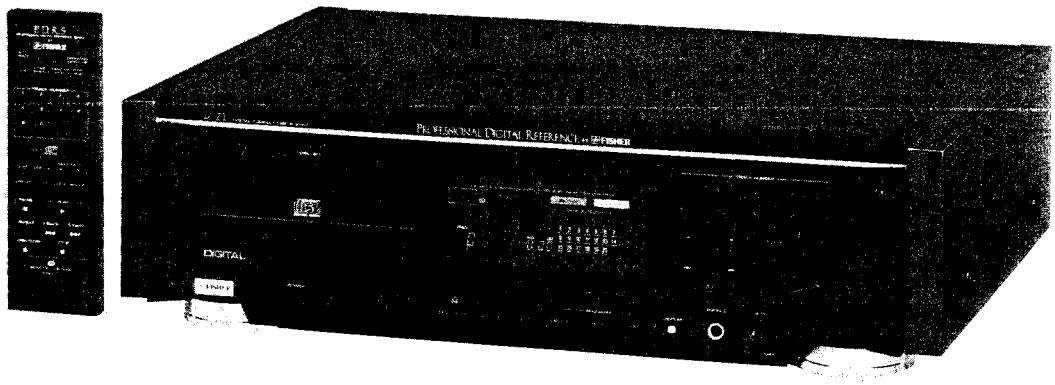

137 348 40 (EUROPE)
137 348 41 (SWISS)

SPECIFICATIONS

System ..... Compact disc digital audio system
Remote Control (RAD-Z1) ..... 30-function wireless remote control

AUDIO CHARACTERISTICS

Frequency Response ..... 2 Hz ~ 20 kHz ±0.5 dB
Total Harmonic Distortion ..... Less than 0.0025% (1 kHz)
S/N Ratio (IHF, A-Network) ..... More than 110 dB
Dynamic Range ..... More than 98 dB
Wow and Flutter ..... Below measurable limits
Channel Separation ..... More than 100 dB (1 kHz)
Output Voltage max. ..... 2 Vrms
Output Level and Impedance
Headphones ..... 0 ~ 500 mV/8 Ω
Digital Output System ..... Digital audio interface format
Optical Output ..... −15 dBm ~ −21 dBm
Coaxial Output ..... 500 mVp-p/75 Ω ±20%

FUNCTIONS

Program Functions ..... 20 selections
Scanning ..... 2 speed fast-forward/back with sound, 2 speed search in PAUSE mode
Intro-Scan ..... 10 sec. or 1 ~ 99 sec. programmable with the remote control
Random Disc Play ..... With RANDOM PLAY button on the remote control
Repeat ..... One track, All tracks, All programmed tracks, or A through B with the remote control
Disc Loading ..... Motor driven horizontal loading

DIGITAL SIGNAL PROCESSING

Optical Pickup ..... 3-beam laser
Error Correction ..... CIRC
Sampling Frequency ..... 44.1 kHz
D/A Conversion ..... 2 D/A converters 18-bit linear
Filters ..... 8-times oversampling digital filter, linear phase analog filter

GENERAL

Power Requirements ..... AC: 220V
(50 Hz) ..... 30 Watts
Dimensions (WxHxD) ..... 480 x 130 x 325mm
Weight (approx.) ..... 8.4 kg

– Specifications and design are subject to change without notice. –

REFERENCE No. WM-570340

CD PLAYER DISASSEMBLY PROCEDURES

REMOVING THE DISC TRAY

1. Push the POWER button to switch the power on and push the OPEN/CLOSE button to open the Disc Tray.
2. Push the POWER button to switch the power off while the Disc Tray is open.

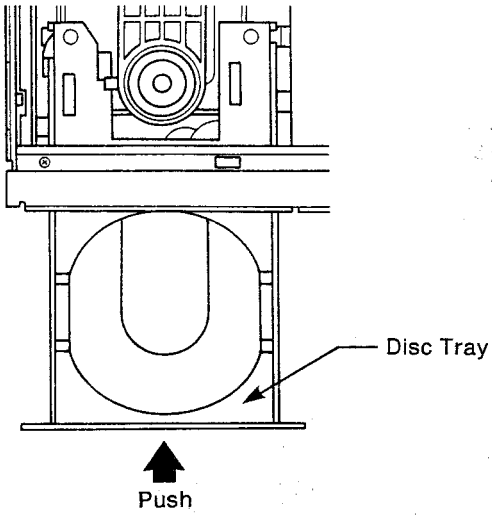

3. Now remove the Disc Tray from the cabinet while pressing the tab in the direction of the arrow in the diagram below.

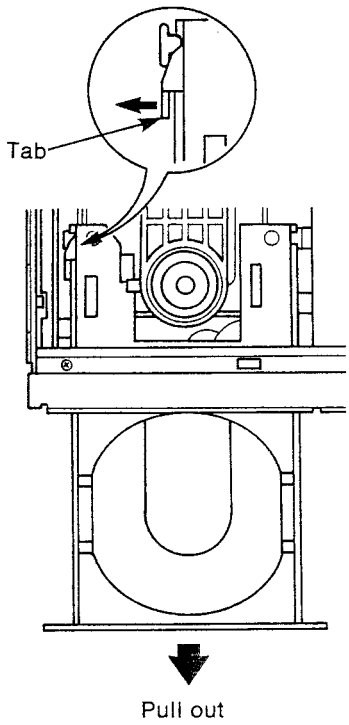

REMOVING THE MECHANISM

1. Take out the four screws (1 ~ 4 in the diagram below) with which the mechanism is mounted in place and remove the mechanism.

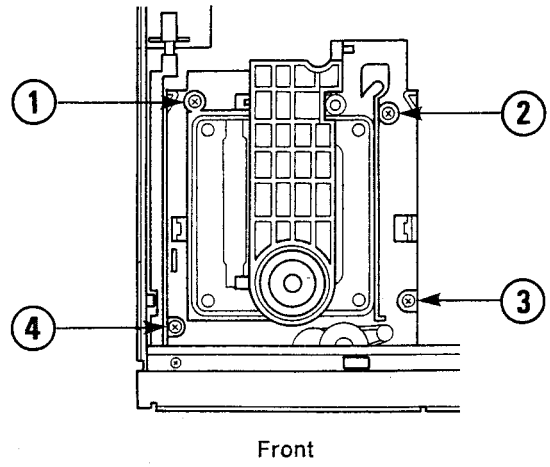

2. The mechanism should be removed with the lead wires still attached, and then placed on a wooden or plastic sheet as shown below to adjust the diffraction grating.

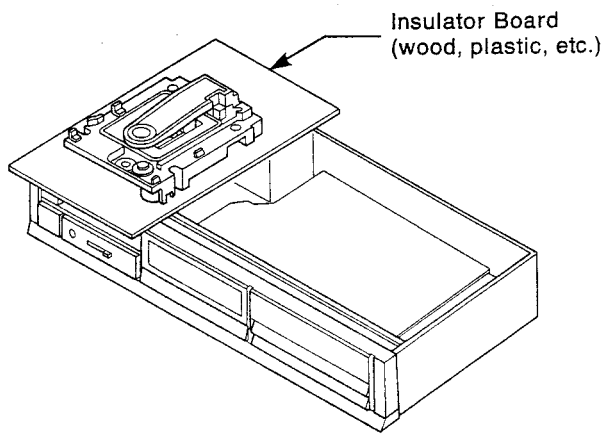

NOTE FOR ASSEMBLING DISC TRAY

1. Place the Disc Tray lever as illustrated and assemble the disc tray.

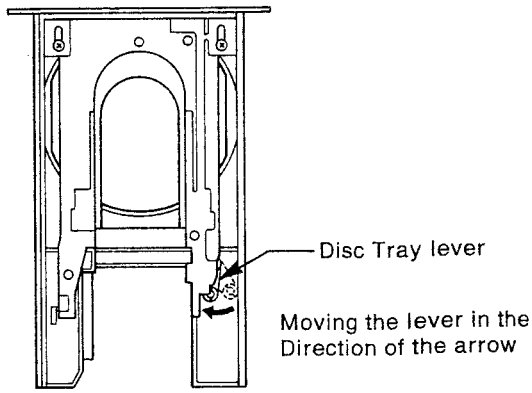

Bottom View

SAFETY CERTIFICATION

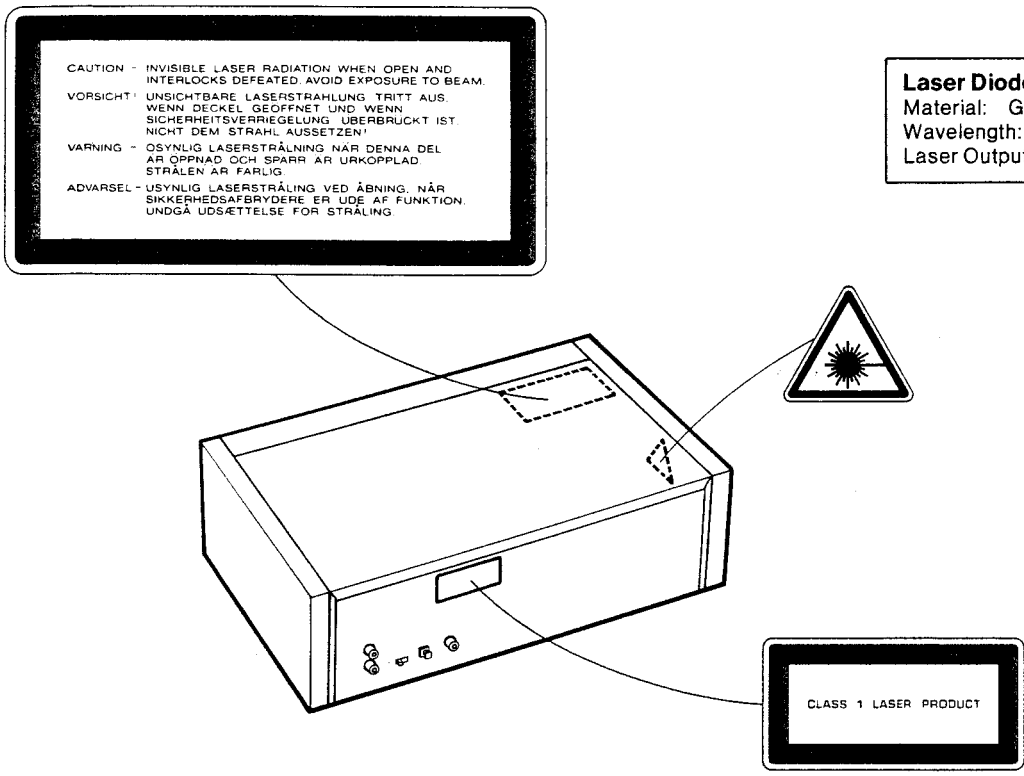

Laser Diode Properties
Material: Ga-Al-As
Wavelength: 755 – 815 nm (25°C)
Laser Output: Continuous Wave max. 0.5 mW

CAUTION – USE OF CONTROLS OR ADJUSTMENTS OR PERFORMANCE OF PROCEDURES OTHER THAN THOSE SPECIFIED HEREIN MAY RESULT IN HAZARDOUS RADIATION EXPOSURE.

THE COMPACT DISC PLAYER SHOULD NOT BE ADJUSTED OR REPAIRED BY ANYONE EXCEPT QUALIFIED SERVICE PERSONNEL.

CD MAIN P.C.BOARD ALIGNMENT POINTS
(TOP VIEW)

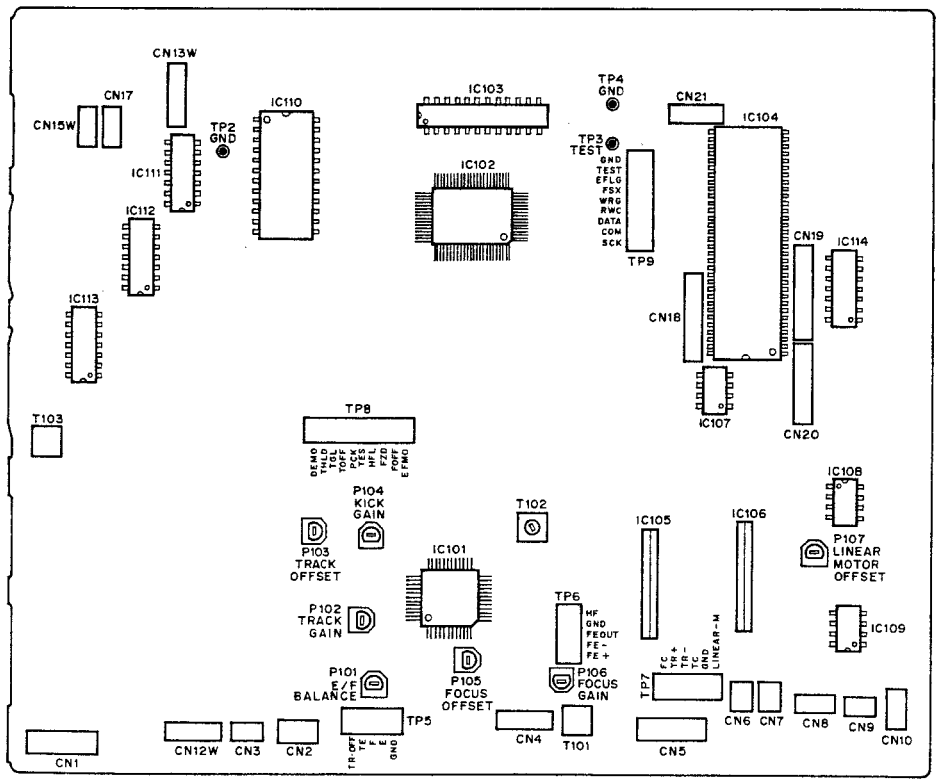

CD PLAYER ADJUSTMENT PROCEDURES

BEFORE CHECKING OR ADJUSTING CD PLAYER

1. Procedures for all adjustments for the CD player from start to finish are described below.
2. If no problems are found after each item is checked when the pick-up is replaced, there is no need to adjust all items again.

SETTING OF INITIAL POSITION OF VOLUME

1. Set the variable resistors to the initial positions listed below:

P101 (E/F BALANCE)	Mechanical Center
P102 (TRACKING GAIN)	Mechanical Center
P103 (TRACKING OFFSET)	Mechanical Center
P104 (KICK GAIN)	Mechanical Center
P105 (FOCUS OFFSET)	Mechanical Center
P106 (FOCUS GAIN)	Mechanical Center
P107 (LINEAR MOTOR OFFSET)	Mechanical Center

FREE RUN FREQUENCY ADJUSTMENT

1. Connect the frequency counter to VCO test terminal **TP8 PCK** test pin and to **GND.** (Use a 10:1 probe.)
2. Short the test point **TP6 OSC ON** pin to **GND.**
3. Push the POWER button to switch the power on and push the STOP button.
4. Adjust the OSC coil T102 using a plastic screwdriver until the frequency counter indicator reads 4.3218MHz ±10kHz.

LINEAR MOTOR OFFSET ADJUSTMENT

1. Push the POWER button to switch the power on and push the STOP button.
2. Connect a DC Voltmeter to the test terminal **TP7 LINEAR MOTOR** pin, to **GND.**
3. In this condition check that the DC Voltmeter indicator is in the range 0V±100mV, and adjust P107 if it is not.

E/F BALANCE ADJUSTMENT

1. Place the test disc (Modern Wave Ⅱ) on the Disc Tray, and play the fourth item on the disc. Short the test point **TP3 TEST** pin to **GND**, and test terminal **TP5 TROFF** pin to **GND** to turn tracking servo OFF.
2. Connect a DC Voltmeter and an oscilloscope via the low-pass filter like that shown in the illustration below to the test terminal **TP5 TE** (tracking error) pin.

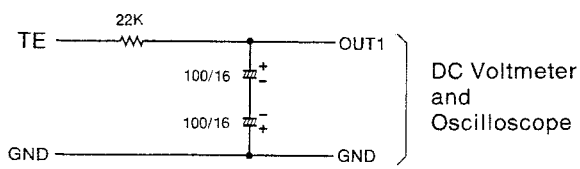

Measurement circuit

3. Adjust P101 so that the DC Voltmeter reading is 0V±50mV (oscilloscope waveform is symmetric to + and − about the zero level).

FOCUS GAIN ADJUSTMENT

1. Apply P106 to the position of Mechanical center position, and place the test disc (Modern Wave Ⅱ) on the Disc Tray.
2. Connect the measurement tool described in the last section to connector (CN5).
3. Connect the Pick-up Connector Plag to the measurement circuit.
4. Push the POWER button to switch the power on and PLAY the first item on the test disc. Now apply a signal of 900Hz and 0.3Vp-p from the signal generator to the measurement circuit.
5. Set the oscilloscope to X-Y operation, and while observing the lissajous waveform adjust P106 to the point where the phase difference is 90° as shown in Fig. 1 below.

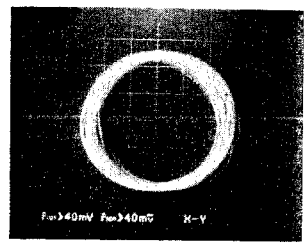

Fig.1

TRACKING GAIN ADJUSTMENT

1. Apply P102 to the position of Mechanical center position, and place the test disc (Modern Wave Ⅱ) on the Disc Tray.
2. Connect the measurement tool described in the last section to the connector (CN5).
3. Connect the Pick-up Connector Plag to the measurement circuit.
4. Push the POWER button to switch the power on and PLAY the first item on the test disc. Now apply a signal of 1400Hz and 0.3Vp-p from the signal generator to the measurement circuit.
5. Set the oscilloscope to X-Y operation, and while observing the lissajous waveform adjust P102 to the point where the phase difference is 90° as shown in Fig. 1 above.

NOTE:
If these two adjustments are performed, the TRACKING OFFSET must also be adjusted.

ADJUSTMENT OF FOCUS/TRACKING GAIN

The measurement circuit diagrammed below must be used in order to adjust focus gain and tracking gain correctly.

1. Use IC TA7256P or an equivalent product.
2. Short the interval between **IN** and **SG**, apply 1kHz, 1Vp-p from **SG**, and adjust variable resistor 2kΩ-B so that the **OUT** output is minimum.

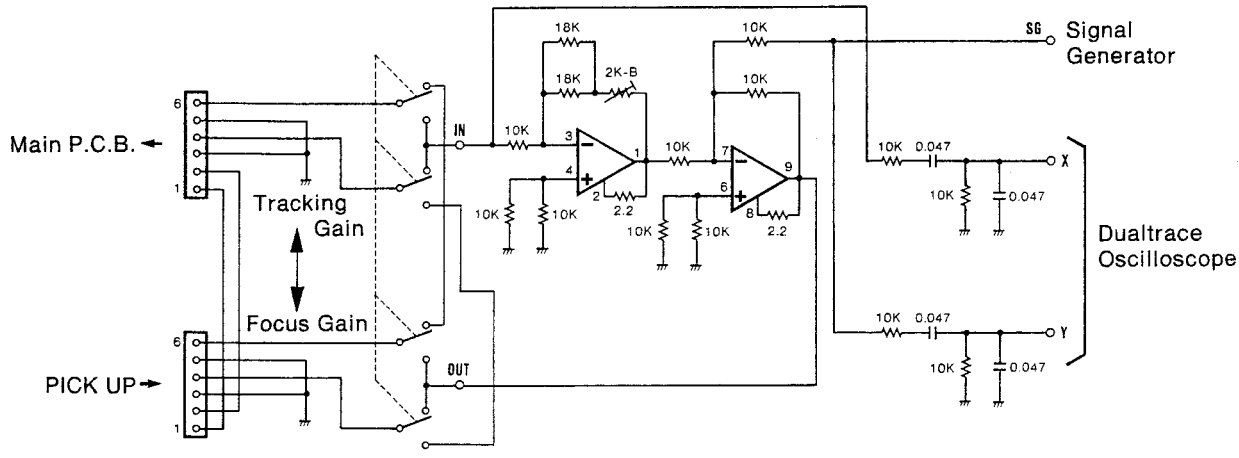

Measurement circuit

FOCUS OFFSET ADJUSTMENT

1. Push the POWER button to switch the power on and push the OPEN/CLOSE button to open the Disc Tray and remove the disc.
2. Push the OPEN/CLOSE button to close the Disc Tray and push the STOP button.
3. Connect a DC Voltmeter to the test terminal **TP7 FC** (focus coil) pin and short the test terminal **TP8 FOFF** pin to **GND.**
4. In this condition check that the DC Voltmeter indicator is in the range −0.5V±50mV, and adjust P105 if it is not.

TRACKING OFFSET ADJUSTMENT

1. Push the POWER button to switch the power on and push the STOP button.
2. Connect a DC Voltmeter to the test terminal **TP7 TC** (tracking coil) pin and short the test point **TP8 TOFF** pin to **GND.**
3. In this condition check that the DC Voltmeter indicator is in the range 100mV±50mV, and adjust P103 if it is not.

NOTE:
Perform this adjustment once again after adjusting the E/F BALANCE and TRACKING GAIN signals.

KICK GAIN ADJUSTMENT

1. Place the test disc (Modern Wave Ⅱ) on the Disc Tray.
2. Set the oscilloscope to NORMAL TRIG., set the EXT. TRIG. pin to external trigger, and input the trigger from test point **TP8 THLD** pin to the oscilloscope.
3. Next connect test point **TP6 HF** pin to Channel 1 of the oscilloscope, and connect test terminal **TP5 TE** pin to Channel 2.
4. Push the POWER button to switch the power on and PLAY the first item on the test disc, and the push the PAUSE button. Now observe the waveforms for **HF** and **TE** with triggers applied from test point **TP8 THLD** pin. At this point, adjust P104 so that a kick pulse waveform of about 1 to 1.3 tracks as shown in Fig. 2 below is obtained.

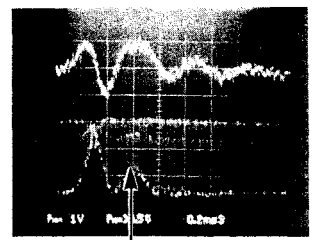

← Tracking Error Out

← HF waveform

Adjustment must be performed so curve section in Fig.2 appears.

Fig.2

D/A CONVERTER DISTORTION ADJUSTMENT

1. Change the Output Selector Switch to ANALOG position.
2. Connect the Harmonic Distortion Meter to the LINE OUT jack through the Amplifier (60dB) and Low Pass Filter (20kHz).
3. Place the test disc YEDS7/YEDS18 (SONY) on the Disc Tray, and play the 1kHz (−60dB).
4. Adjust the AUDIO P.C.Board VR301 (Left channel) and VR302 (Right channel) so that distortion is at a minimum level (less than 1.6%).
5. Disconnect the Amplifier (60dB) and play the 1kHz (0dB).
6. In this condition check that the Distortion meter indicator is less than 0.003%.

ADJUSTMENT OF TURNTABLE HEIGHT

This adjustment must be performed when the Spindle Motor is replaced.

1. The turntable should be mounted so that its upper surface is 13.75mm±0.1mm above the surface of the chassis.

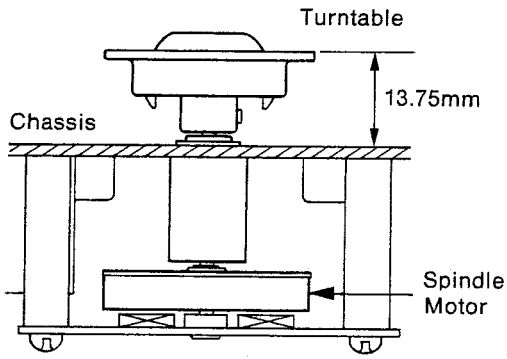

2. Place the test disc (Modern Wave Ⅱ) on the turntable.
3. Connect a DC Voltmeter and an oscilloscope via the low-pass filter shown below to test terminal **TP7 FC** (focus coil) pin.

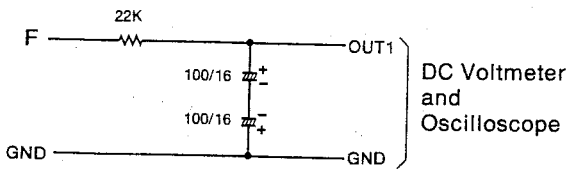

Measurement circuit

4. Push the POWER button to switch the power on and PLAY the First and Last Track No. on the disc.
5. If the DC Voltmeter reading is not in the ranges 0V±0.2V for inner tracks and 0V±0.35V for outer tracks, then the turntable height must be readjusted. Raise the turntable higher if the DC Voltmeter indicator is on the plus (+) side, and lower it if it is on the minus (−) side.
(With this circuit 1V represents movement of approximately 0.55mm ~ 0.65mm.)

CONFIRMING HF LEVEL

1. PLAY the fourth item on the test disc (Modern Wave Ⅱ).
2. Connect an oscilloscope to the test point **TP6 HF** pin, and check that its HF level is in the range 2.6±0.5V(p-p).
3. If the results of the above procedure are not satisfactory, the Pick-up is damaged.

CABINET EXPLODED VIEW (1)

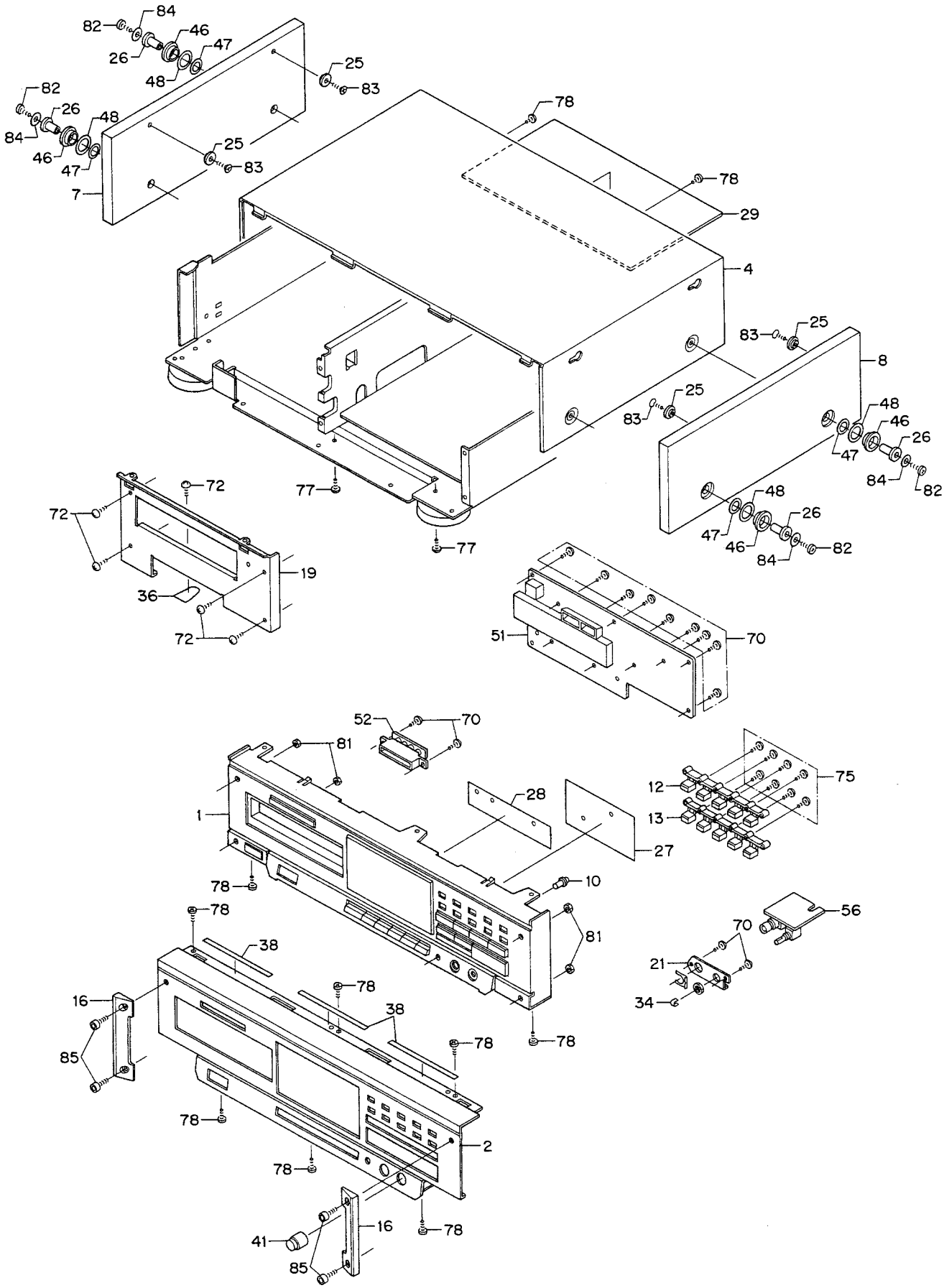

CABINET EXPLODED VIEW (2)

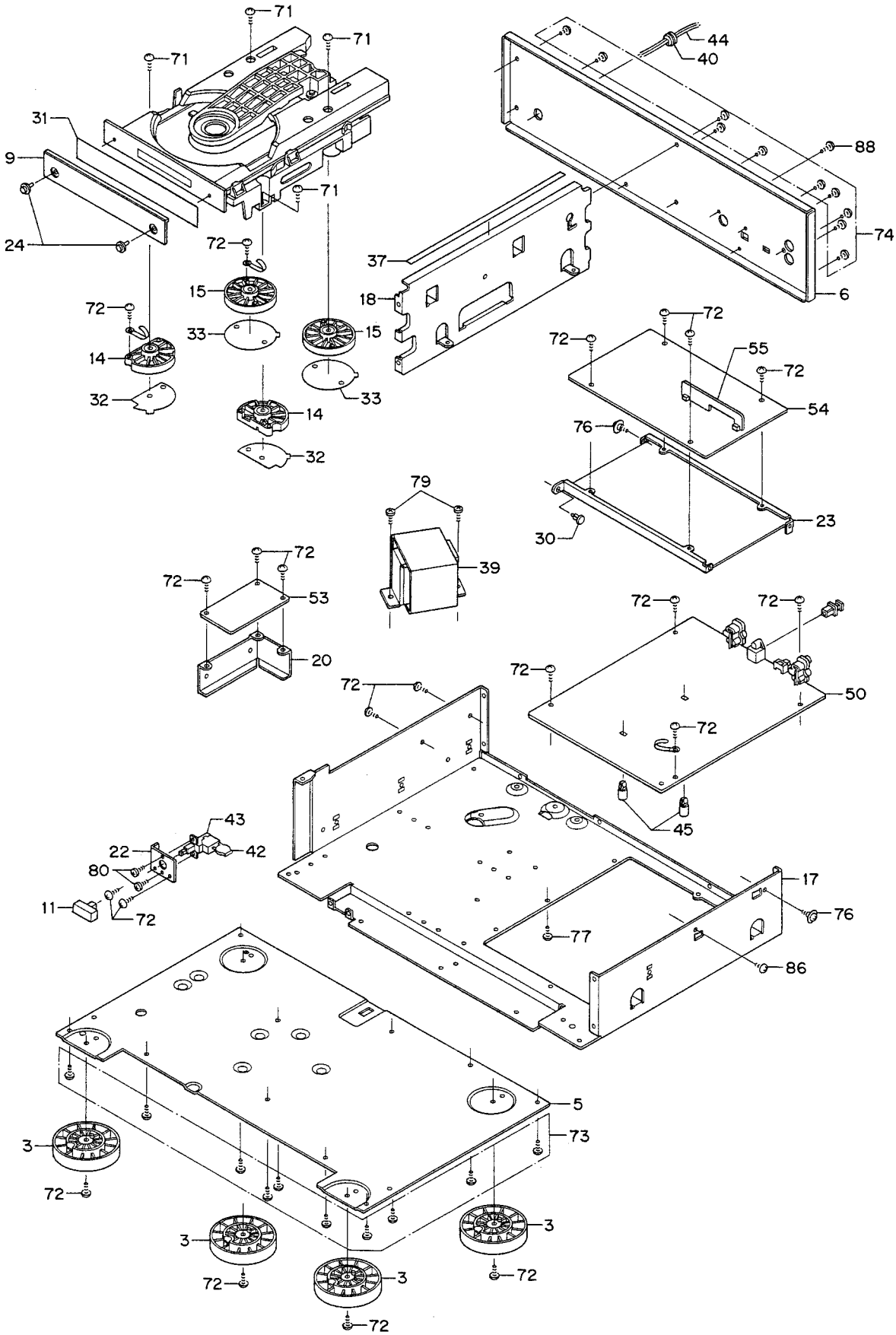

CABINET PARTS LIST

Ref. No.	Part No.	Description	Q'ty
PACKAGE			
	620 000 0024	Bag Polyethylene	1
	620 201 8935	Outer Carton	1
	620 196 4844	Sheet,Poly	1
	620 195 3787	Pad,Bottom	1
	620 195 3794	Pad,Top	1
	620 152 7452	Serial No. Sheet	2
ACCESSORIES			
	620 202 7838	Assy,Poly Cover	1
	620 202 7845	Instruction Manual	1
	620 196 9757	Cord	1
	620 196 2826	Opto Connector,DIG I/O	1
	620 152 2624	Certificate Card	1
	620 152 7452	Serial No. Sheet	1
	620 057 8783	Bag Fan	1
	620 197 0562	Remocon,RAD-Z1 (Remote Control)	1
	620 198 9786	Label	1
CABINET			
	620 018 1495	Connector 3P Assy (CN9W)	1
	620 018 1501	Connector 3P Assy (CN10W)	1
	620 018 1976	Connector 2P Assy (CN6W)	1
	620 018 2157	Connector 1P Assy (CNTP1)	1
	620 022 3454	Terminal Lug	1
	403 072 2703	CERAMIC 0.022U Z 50V (C2)	1
	620 197 2696	Assy,Connector-S,2P (Load Motor)	1
	620 197 2702	Assy,Connector-S,4P (Spindle Motor)	1
	620 201 8997	Cover,Safety	1
	620 061 2340	Notes (Laser)	1
	620 061 2401	Notes (Laser)	1
	620 061 2418	Notes (Laser)	1
	620 125 8103	Lug	2
	620 125 8110	Lug	1
	620 125 8424	Wire Band	11
	620 152 7452	Serial No. Sheet	1
1	620 196 4233	Assy,Cabinet,Front	1
2	620 196 4240	Assy,Panel,Front	1
3	620 201 8508	Assy,Foot (Europe)	4
3	620 195 9413	Assy,Foot (Swiss)	4
4	620 195 3886	Cover,Top	1
5	620 196 1263	Plate,Bottom	1
6	620 201 8881	Panel,Rear	1
7	620 201 7754	Panel,Side,Wood,Left (Europe)	1
7	620 195 3732	Panel,Side,Wood,Left (Swiss)	1
8	620 201 7761	Panel,Side,Wood,Right (Europe)	1
8	620 195 3749	Panel,Side,Wood,Right (Swiss)	1
9	620 196 0549	Panel,Tray	1
10	620 196 0655	Button,Small	1
11	620 195 5514	Button,Power	1
12	620 196 0662	Button,Number 1-5	1
13	620 196 0679	Button,Number 6-0	1
14	620 196 0556	Foot,Mecha-1	2
15	620 196 0563	Foot,Mecha-2	2
16	620 195 1943	Handle	2
17	620 196 1225	Chassis,Main	1
18	620 196 1232	Chassis,Center	1
19	620 196 1218	Chassis,Front	1
20	620 196 0785	Bracket-E,Power	1
21	620 196 0792	Bracket-E	1
22	620 196 1201	Bracket-E,Power Switch	1
23	620 196 1270	Bracket-E,PCB Shield	1
24	620 195 3756	Cap,Lid	2
25	620 195 3800	Spacer	4
26	620 201 7105	Spacer,Wood	4
27	620 199 5077	Cushion,Button-1	1
28	620 199 5084	Cushion,Button-2	1
29	620 197 5192	Pad,Damper	1
30	620 196 4226	Fixer,Rivet	1
31	620 196 2666	Adhesive Sheet,Tray	1
32	620 197 5208	Adhesive Sheet,Foot-1	2
33	620 197 5215	Adhesive Sheet,Foot-2	2
34	620 198 6570	Sheet,Volume	1
35	620 198 6600	Sheet,Disc Set	1
36	620 198 6655	Sheet	1
37	620 197 5758	Felt,Cushion-1	1
38	620 197 5765	Felt,Cushion-2	3
39	⚠ 620 201 8539	Power Trans,SEV,25VA	1
40	620 053 2136	Bushing (Power Cord)	1
or	620 053 2129	Bushing (Power Cord)	1
41	620 189 1195	Knob Volume (Level Volume)	1
42	⚠ 620 006 6679	Capacitor 0.01MF400V (C1)	1
43	⚠ 620 016 7598	Power Switch	1
44	⚠ 620 023 7550	Power Cord	1
45	620 050 4409	Mount P.C.B	2
46	620 201 7099	Cap,Wood	4
47	620 201 9949	Spacer	4
48	620 203 7073	Cushion	4
50	620 202 0129	Assy,PCB,Main	1
51	620 197 2016	Assy,PCB,Control	1
52	620 197 2023	Assy,PCB,LED	1
53	620 202 0136	Assy,PCB,Filter	1
54	620 197 2276	Assy,PCB,Audio	1
55	620 197 2313	Assy,PCB,Audio Sub	1
56	620 197 2498	Assy,PCB,Headphone	1
70	411 020 5508	SCR S-TPG BRZ 2.6X6	13
71	411 020 6802	SCR S-TPG BRZ 3X18	4
72	411 020 7700	SCR S-TPG BRZ 3X6	26
73	411 099 9704	SCR S-TPG BRZ 3X6	10
74	411 099 9803	SCR S-TPG BRZ 3X8	8
75	411 021 0809	SCR S-TPG BIN 2X6	8
76	411 021 2704	SCR S-TPG BIN 2.6X6	1
77	411 021 5903	SCR S-TPG BIN 3X6	3
78	411 021 6603	SCR S-TPG BIN 3X8	10
79	411 021 9109	SCR S-TPG BIN 4X6	2
80	411 003 8908	SCR PAN+SW 3X6	2
81	411 004 5906	NUT HEX 5	4
82	412 033 7602	SPECIAL SCREW	4
83	411 082 9605	SCR WOOD FLT 3.1X16	4
84	412 033 7909	SPECIAL WASHER	4
85	412 033 7404	SPECIAL SCREW	4
86	620 122 6423	Screw, PAN +M2.6X5.0	2
88	412 034 8509	SPECIAL SCREW	3

NOTES:

1. Parts order must contain Model Number, Part Number and Description.
2. Ordering quantity of screws and resistors must be multiple of 10 pcs.

PRODUCT SAFETY NOTICE

Each precaution in this manual should be followed during servicing. Components identified with the IEC symbol ⚠ in the parts list and the schematic diagram designate components in which safety can be of special significance. When replacing a component identified with ⚠, use only the replacement parts designated, or parts with the same ratings of resistance, wattage or voltage that are designated in the parts list in this manual. Leakage-current or resistance measurements must be made to determine that exposed parts are acceptably insulated from the supply circuit before returning the product to the customer.

MECHANISM EXPLODED VIEW

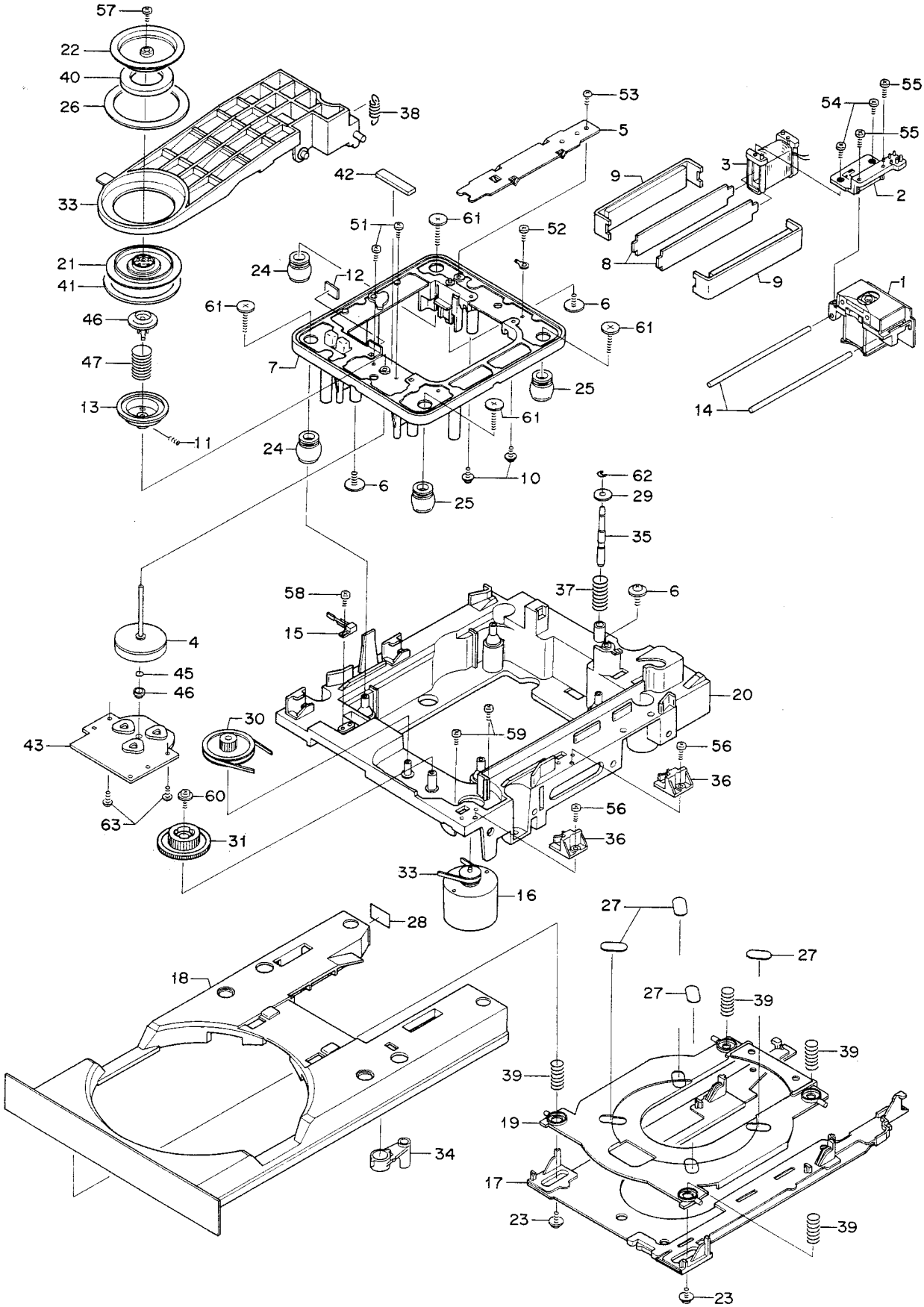

MECHANISM PARTS LIST

Ref. No.	Part No.	Description	Q'ty
MECHANISM			
	620 125 8424	Wire Band	3
	620 125 8424	Wire Band	2
1	620 062 6200	Pick-up Assy 88 BS	1
2	620 183 4871	Holder Bobbin Assy	1
3	620 183 4888	Bobbin Assy	1
4	620 183 5144	Spindle Motor Assy [M101]	1
5	620 195 2018	Assy,Bracket-E,Sensor	1
6	620 051 4316	Screw 3X10	2
7	620 195 2001	Assy,Chassis	1
8	620 121 6448	Yoke Center	2
9	620 183 4895	Yoke Side Assy	2
10	620 122 6324	Screw Washer +2.6X6.0	2
11	620 123 0116	Set Screw V-Cone 2X4	1
12	620 124 3321	Cushion	1
13	620 126 4111	Turntable	1
14	620 133 4104	Shaft Pick-up	2
15	620 015 3843	Leaf Switch (Open/Close) [SW101]	1
16	620 030 4108	Motor (Loading Motor) [M102]	1
17	620 083 2878	Gear Rack Assy	1
18	620 196 0594	Table,Loading	1
19	620 184 9592	Table CD Assy	1
20	620 117 1280	Chassis (Load)	1
21	620 119 2223	Holder Disc	1
22	620 196 4479	Yoke,Magnet	1
23	620 122 9738	Screw Bind HD. +M3.0X8	2
24	620 124 3437	Cushion Rubber	2
25	620 124 3444	Cushion Rubber	2
26	620 124 3628	Cushion Flap	1
27	620 184 9905	Pad Disc (Felt)	4
28	620 125 0145	Cushion Table Load	1
29	620 125 1005	Washer	1
30	620 127 9597	Gear Pulley	1
31	620 127 9603	Gear Pinion	1
32	620 128 6816	Belt	1
33	620 129 5993	Flap Disc Cramp	1
34	620 131 9835	Lever Table Load	1
35	620 133 4241	Shaft Damper	1
36	620 136 0769	Guide Table Load	2
37	620 138 0088	Spring Damper	1
38	620 139 2043	Spring Flap	1
39	620 139 4672	Spring Table CD	4
40	620 184 3026	Magnet Disc Clamp	1
41	620 192 6606	Pad Disc Hold	1
42	620 192 6613	Pad Damper	1
43	620 195 7709	Assy,PCB,Spindle,Motor	1
44	620 191 3507	Support Spindle	1
45	620 125 0923	Thrust Washer	1
46	620 184 2708	Guide Center	1
47	620 187 2859	Spring Guide Center	1
51	411 020 8004	SCR S-TPG BRZ 3X8	2
52	411 099 9704	SCR S-TPG BRZ 3X6	1
53	411 099 9803	SCR S-TPG BRZ 3X8	1
54	411 021 0601	SCR S-TPG BIN 2X5	2
55	411 030 6403	SCR BIN 2X5	2
56	411 099 9407	SCR S-TPG BRZ 2.6X8	2
57	411 021 0304	SCR S-TPG BIN 2X4	1
58	411 021 0908	SCR S-TPG BIN 2X6	1
59	411 031 0905	SCR BIN 2.6X4	2
60	412 026 0108	SPECIAL SCREW	1
61	412 032 8105	SPECIAL SCREW	4
62	411 015 8903	RING E 2	1
63	620 051 4316	Screw 3X10	1

NOTES:

1. Parts order must contain Model Number, Part Number and Description.
2. Ordering quantity of screws and resistors must be multiple of 10 pcs.

P.C.BOARD PARTS LIST

Ref. No.	Part No.	Description	Q'ty
SY,PCB,MAIN			
	620 202 0129	Assy,PCB,Main	1
	620 016 8434	Slide Switch 2P2T (Out Put Selector)	1
	620 017 2721	Fuse Clip	8
	⚠ 423 004 3301	FUSE 250V T0.8A	4
	411 020 7700	SCR S-TPG BRZ 3X6	2
	411 002 9005	SCR PAN 3X8	1
	620 202 0082	Jack,RCA,2P,Gold	1
	620 199 4742	Jack,RCA,1P,Gold	1
	620 196 1607	Converter,E/O,Totx-174	1
	620 053 9036	Plate Heat Sink	1
	620 053 9258	Plate Heat Sink	2
	620 197 2726	Assy,Connector-S,6P	1
	620 197 2733	Assy,Connector-S,7P	1
	620 197 2757	Assy,Connector-S,2P,3P	1
1	620 021 5954	Plug 6P (Power Trans)	1
2	620 021 5923	Plug 3P (Power Trans)	1
3	620 021 8313	Plug 3P (Headphone P.C.B.)	1
4	620 021 8337	Plug 6P (PU Sensor)	1
5	620 021 8610	Plug 6P (PU ACT)	1
6	620 021 7620	Plug 2P (Linear Motor)	1
7	620 021 1970	Plug 2P (Loading Motor)	1
8	620 021 8597	Plug 4P (Spindle Motor)	1
9	620 021 8313	Plug 3P (Linear Sensor)	1
10	620 021 7811	Plug 3P (Open/Close Switch)	1
17	620 021 8597	Plug 4P (Headphone Audio)	1
18	620 021 8344	Plug 10P (Main Control)	1
19	620 021 8351	Plug 11P (Main Control)	1
20	620 021 9976	Plug 9P (Main Control)	1
21	620 021 8337	Plug 6P (Main Control)	1
01	620 197 9589	Inductor 10UH K	1
02	620 202 0112	Inductor 2.2UH K	1
03	620 197 9589	Inductor 10UH K	1
04	620 197 9589	Inductor 10UH K	1
01	620 006 2343	Potentiometer 100KB (E/F Balance)	1
02	620 006 1933	Potentiometer 100KB (Tracking Gain)	1
03	620 006 1957	Potentiometer 20KB (Tracking Offset)	1
04	620 006 1933	Potentiometer 100KB (Kick Gain)	1
05	620 006 1957	Potentiometer 20KB (Focus Offset)	1
06	620 006 1940	Potentiometer 10KB (Focus Gain)	1
07	620 006 1957	Potentiometer 20KB (Linear Motor Offset)	1
01	620 026 8752	RF Low Pass Filter	1
	620 026 8745	RF Filter	1
02	620 028 8699	OSC Coil	1
	620 028 8774	OSC Coil	1
03	620 197 1897	Trans,Pulse	1
1	620 021 6821	Pin 1P	1
2	620 021 6821	Pin 1P	1
3	620 021 6821	Pin 1P	1
4	620 021 6821	Pin 1P	1
5	620 021 5589	Plug 5P	1
6	620 021 5589	Plug 5P	1
7	620 021 3950	Plug 6P	1
8	620 021 3998	Plug 10P	1
9	620 021 5572	Plug 9P	1
01	620 196 8866	Resonator,Ceramic,4.32MHz	1
02	620 197 1910	Resonator,Xtal,16.9344MHz	1
01	409 124 6507	IC LA9200NM	1
02	409 168 1308	IC LC7860J	1
03	409 123 7109	IC LC3517BS-15	1
04	409 164 3801	IC LC6538D-3843	1
05	409 018 5500	IC LA6510	1
06	409 018 5500	IC LA6510	1
07	409 174 9602	IC RC4558D	1
08	409 174 9602	IC RC4558D	1
09	409 174 9602	IC RC4558D	1
10	409 204 0609	IC YM3613C	1
11	409 183 7408	IC MC74HC08AN	1
12	409 183 7507	IC MC74HC74AN	1
13	409 031 5600	IC MC74HCU04N	1
14	409 031 5600	IC MC74HCU04N	1
15	409 031 8106	IC MC7805CT	1
16	409 181 1705	IC MC78L05ACP	1
17	409 183 7606	IC NJM78L07A	1
18	409 031 8205	IC MC79L05ACP	1
19	409 183 7705	IC NJM79L07A	1
01	405 007 6701	TR 2SB598-F-NP	1
02	405 021 0600	TR 2SD1012-G-SPA	1
03	405 034 5104	TR 2SK246-BL	1

Ref. No.	Part No.	Description	Q'ty
Q104	405 035 8005	TR UN411-D	1
Q105	405 035 8104	TR UN421-D	1
Q106	405 004 4601	TR 2SA608-F-SPA-AC	1
Q107	405 018 2600	TR 2SC3400-AC	1
Q108	405 019 2807	TR 2SC536-F-SPA-AC	1
Q109	405 018 2600	TR 2SC3400-AC	1
Q110	405 018 2600	TR 2SC3400-AC	1
Q111	405 003 7702	TR 2SA1346-AC	1
Q112	405 003 7702	TR 2SA1346-AC	1
Q113	405 018 2600	TR 2SC3400-AC	1
Q114	405 018 2600	TR 2SC3400-AC	1
Q115	405 018 2600	TR 2SC3400-AC	1
Q116	405 018 2600	TR 2SC3400-AC	1
D101	407 000 3503	VARACTOR DI SVC211SP	1
D102	407 008 0405	DIODE GMB01-BT	1
D103	407 008 0405	DIODE GMB01-BT	1
D104	407 008 0405	DIODE GMB01-BT	1
D105	407 008 0405	DIODE GMB01-BT	1
D106	407 005 3805	DIODE DS442-BT	1
D107	407 008 0405	DIODE GMB01-BT	1
D108	407 005 3805	DIODE DS442-BT	1
D109	407 005 3805	DIODE DS442-BT	1
D110	407 005 3805	DIODE DS442-BT	1
D111	407 008 0405	DIODE GMB01-BT	1
D112	407 008 0405	DIODE GMB01-BT	1
D113	407 008 0405	DIODE GMB01-BT	1
D114	407 008 0405	DIODE GMB01-BT	1
D115	407 008 0405	DIODE GMB01-BT	1
D117	407 008 0405	DIODE GMB01-BT	1
D118	407 008 0405	DIODE GMB01-BT	1
D119	407 008 0405	DIODE GMB01-BT	1
D120	407 008 0405	DIODE GMB01-BT	1
D121	407 070 4608	ZENER DIODE GZS30Y-BT	1
D122	407 051 6706	ZENER DIODE GZS5.1Y-BT	1
D123	407 005 8602	DIODE ERA15-02	1
D124	407 005 8602	DIODE ERA15-02	1
D125	407 005 8602	DIODE ERA15-02	1
D126	407 005 8602	DIODE ERA15-02	1
D127	407 005 8602	DIODE ERA15-02	1
D128	407 005 8602	DIODE ERA15-02	1
D129	407 005 8602	DIODE ERA15-02	1
D130	407 005 8602	DIODE ERA15-02	1
D131	407 005 8602	DIODE ERA15-02	1
D132	407 005 8602	DIODE ERA15-02	1
D133	407 008 0405	DIODE GMB01-BT	1
C101	403 004 0500	CERAMIC 0.047U K 25V	1
C102	403 038 2402	ELECT 100U M 6.3V	1
C103	403 038 2402	ELECT 100U M 6.3V	1
C104	403 038 2402	ELECT 100U M 6.3V	1
C105	403 014 6202	CERAMIC 18P K 50V	1
C106	403 014 6202	CERAMIC 18P K 50V	1
C107	403 057 0106	POLYESTER 0.01U J 50V	1
C108	403 060 5808	POLYESTER 3300P J 50V	1
C109	403 067 6204	MT-COMPO 0.15U J 50V	1
C110	403 067 6709	MT-COMPO 0.22U J 50V	1
C111	403 067 7300	MT-COMPO 0.33U J 50V	1
C112	403 018 8509	CERAMIC 220P K 50V	1
C113	403 026 9406	CERAMIC 5P C 50V	1
C114	403 031 0306	CERAMIC 68P K 50V	1
C115	403 015 0407	CERAMIC 180P K 50V	1
C116	403 048 7701	ELECT 0.47U M 50V	1
C117	403 031 0306	CERAMIC 68P K 50V	1
C118	403 067 7409	MT-COMPO 0.039U J 50V	1
C119	403 018 8509	CERAMIC 220P K 50V	1
C120	403 087 2507	STYRENE 1000P J 50V	1
C121	403 057 0106	POLYESTER 0.01U J 50V	1
C122	403 004 0500	CERAMIC 0.047U K 25V	1
C123	403 149 7105	POLYPRO 680P J 100V	1
C124	403 067 5603	MT-COMPO 0.1U J 50V	1
C125	403 056 7304	POLYESTER 1000P J 50V	1
C126	403 057 0106	POLYESTER 0.01U J 50V	1
C127	403 038 2402	ELECT 100U M 6.3V	1
C128	403 004 0500	CERAMIC 0.047U K 25V	1
C129	403 049 1708	ELECT 1U M 50V	1
C130	403 049 1708	ELECT 1U M 50V	1
C131	403 004 0500	CERAMIC 0.047U K 25V	1
C132	403 051 2106	ELECT 4.7U M 50V	1
C133	403 049 5508	ELECT 10U M 50V	1
C134	403 085 0802	NP-ELECT 47U M 6.3V	1

P.C.BOARD PARTS LIST (Continued)

Ref. No.	Part No.	Description	Q'ty
C135	403 067 7805	MT-COMPO 0.47U J 50V	1
C136	403 026 8201	CERAMIC 470P K 50V	1
C137	403 067 8406	MT-COMPO 0.082U J 50V	1
C138	403 067 5603	MT-COMPO 0.1U J 50V	1
C139	403 026 8201	CERAMIC 470P K 50V	1
C140	403 067 5603	MT-COMPO 0.1U J 50V	1
C141	403 038 2402	ELECT 100U M 6.3V	1
C142	403 045 9104	ELECT 220U M 25V	1
C143	403 045 9104	ELECT 220U M 25V	1
C144	403 026 9406	CERAMIC 5P C 50V	1
C145	403 067 5603	MT-COMPO 0.1U J 50V	1
C146	403 050 1308	ELECT 2.2U M 50V	1
C147	403 038 7209	ELECT 220U M 6.3V	1
C148	403 067 7805	MT-COMPO 0.47U J 50V	1
C149	403 057 0106	POLYESTER 0.01U J 50V	1
C150	403 067 5603	MT-COMPO 0.1U J 50V	1
C151	403 086 2706	NP-ELECT 1U M 50V	1
C152	403 067 5603	MT-COMPO 0.1U J 50V	1
C153	403 057 7204	POLYESTER 0.012U J 50V	1
C154	403 057 7204	POLYESTER 0.012U J 50V	1
C155	403 056 7304	POLYESTER 1000P J 50V	1
C156	403 067 6709	MT-COMPO 0.22U J 50V	1
C157	403 056 7304	POLYESTER 1000P J 50V	1
C159	403 067 5603	MT-COMPO 0.1U J 50V	1
C160	403 038 2402	ELECT 100U M 6.3V	1
C161	403 067 5603	MT-COMPO 0.1U J 50V	1
C162	403 067 5603	MT-COMPO 0.1U J 50V	1
C163	403 067 7805	MT-COMPO 0.47U J 50V	1
C164	403 057 0106	POLYESTER 0.01U J 50V	1
C165	403 067 5603	MT-COMPO 0.1U J 50V	1
C166	403 004 0500	CERAMIC 0.047U K 25V	1
C167	403 038 2402	ELECT 100U M 6.3V	1
C168	403 067 5702	MT-COMPO 1U J 50V	1
C169	403 059 5604	POLYESTER 0.022U J 50V	1
C170	403 004 0500	CERAMIC 0.047U K 25V	1
C171	403 004 0500	CERAMIC 0.047U K 25V	1
C172	403 004 0500	CERAMIC 0.047U K 25V	1
C173	403 044 0300	ELECT 47U M 16V	1
C174	403 063 5102	POLYESTER 8200P J 50V	1
C175	403 011 3501	CERAMIC 120P J 50V	1
C178	403 010 5704	CERAMIC 12P J 50V	1
C179	403 010 5704	CERAMIC 12P J 50V	1
C180	403 051 2106	ELECT 4.7U M 50V	1
C181	403 050 1308	ELECT 2.2U M 50V	1
C182	403 074 2701	CERAMIC 0.047U Z 50V	1
C183	403 074 2701	CERAMIC 0.047U Z 50V	1
C184	403 074 2701	CERAMIC 0.047U Z 50V	1
C185	403 051 5107	ELECT 470U M 50V	1
C186	403 051 5107	ELECT 470U M 50V	1
C187	403 050 3708	ELECT 22U M 50V	1
C188	403 177 4503	ELECT 4700U M 25V	1
C189	403 177 4503	ELECT 4700U M 25V	1
C190	403 047 6309	ELECT 470U M 25V	1
C191	403 038 2402	ELECT 100U M 6.3V	1
C192	403 038 2402	ELECT 100U M 6.3V	1
C193	403 039 7901	ELECT 100U M 10V	1
C194	403 045 0606	ELECT 100U M 25V	1
C195	403 038 2402	ELECT 100U M 6.3V	1
C196	403 039 7901	ELECT 100U M 10V	1
C198	403 039 7901	ELECT 100U M 10V	1
C199	403 039 7901	ELECT 100U M 10V	1
C200	403 018 8509	CERAMIC 220P K 50V	1
C201	403 018 8509	CERAMIC 220P K 50V	1
C202	403 018 8509	CERAMIC 220P K 50V	1
C203	403 010 1805	CERAMIC 1000P K 50V	1
C204	403 010 1805	CERAMIC 1000P K 50V	1
C205	403 018 8509	CERAMIC 220P K 50V	1
C206	403 018 8509	CERAMIC 220P K 50V	1
C207	403 072 2703	CERAMIC 0.022U Z 50V	1
C208	403 072 2703	CERAMIC 0.022U Z 50V	1
C209	403 018 8509	CERAMIC 220P K 50V	1
C210	403 018 8509	CERAMIC 220P K 50V	1
C211	403 009 8105	CERAMIC 100P K 50V	1
C212	403 009 8105	CERAMIC 100P K 50V	1
C213	403 009 8105	CERAMIC 100P K 50V	1
C214	403 049 1708	ELECT 1U M 50V	1
R101	401 024 7004	CARBON 1K JA 1/6W	1
R102	401 025 2305	CARBON 150K JA 1/6W	1
R103	401 024 7707	CARBON 100K JA 1/6W	1

Ref. No.	Part No.	Description	Q'ty
R104	401 025 7805	CARBON 2.2K JA 1/6W	1
R105	401 025 8703	CARBON 220K JA 1/6W	1
R106	401 026 0607	CARBON 270 JA 1/6W	1
R107	401 026 7408	CARBON 39K JA 1/6W	1
R108	401 024 9701	CARBON 12K JA 1/6W	1
R109	401 024 9701	CARBON 12K JA 1/6W	1
R110	401 026 7408	CARBON 39K JA 1/6W	1
R111	401 026 1307	CARBON 27K JA 1/6W	1
R112	401 024 7707	CARBON 100K JA 1/6W	1
R113	401 026 4605	CARBON 33K JA 1/6W	1
R114	401 027 2600	CARBON 5.6K JA 1/6W	1
R115	401 027 0507	CARBON 470K JA 1/6W	1
R116	401 027 2303	CARBON 560 JA 1/6W	1
R117	401 024 7707	CARBON 100K JA 1/6W	1
R118	401 024 7707	CARBON 100K JA 1/6W	1
R119	401 026 9907	CARBON 4.7K JA 1/6W	1
R121	401 026 4308	CARBON 3.3K JA 1/6W	1
R122	401 025 7409	CARBON 220 JA 1/6W	1
R123	401 025 8208	CARBON 22K JA 1/6W	1
R124	401 025 8208	CARBON 22K JA 1/6W	1
R125	401 025 8208	CARBON 22K JA 1/6W	1
R126	401 012 7009	CARBON 10K JA 1/4W	1
R127	401 012 8105	CARBON 100K JA 1/4W	1
R128	401 012 8105	CARBON 100K JA 1/4W	1
R129	401 016 3609	CARBON 2.2K JA 1/4W	1
R130	401 014 5201	CARBON 15K JA 1/4W	1
R131	401 012 5708	CARBON 1K JA 1/4W	1
R133	401 027 2600	CARBON 5.6K JA 1/6W	1
R134	401 025 7805	CARBON 2.2K JA 1/6W	1
R135	401 025 7805	CARBON 2.2K JA 1/6W	1
R136	401 026 9907	CARBON 4.7K JA 1/6W	1
R137	401 012 7009	CARBON 10K JA 1/4W	1
R138	401 024 7400	CARBON 10K JA 1/6W	1
R139	401 024 7400	CARBON 10K JA 1/6W	1
R140	401 025 8208	CARBON 22K JA 1/6W	1
R141	401 025 4606	CARBON 18K JA 1/6W	1
R142	401 024 6700	CARBON 100 JA 1/6W	1
R143	401 026 4605	CARBON 33K JA 1/6W	1
R144	401 025 8208	CARBON 22K JA 1/6W	1
R145	401 024 7707	CARBON 100K JA 1/6W	1
R146	401 026 1604	CARBON 270K JA 1/6W	1
R147	401 025 0004	CARBON 120K JA 1/6W	1
R148	401 012 8105	CARBON 100K JA 1/4W	1
R149	401 025 1902	CARBON 15K JA 1/6W	1
R150	401 027 2600	CARBON 5.6K JA 1/6W	1
R151	401 025 8208	CARBON 22K JA 1/6W	1
R152	401 025 8208	CARBON 22K JA 1/6W	1
R153	401 024 9305	CARBON 1.2K JA 1/6W	1
R154	401 027 0309	CARBON 47K JA 1/6W	1
R155	401 026 1604	CARBON 270K JA 1/6W	1
R156	401 025 5405	CARBON 2.2 JA 1/6W	1
R157	401 025 5405	CARBON 2.2 JA 1/6W	1
R158	401 025 7805	CARBON 2.2K JA 1/6W	1
R159	401 025 7805	CARBON 2.2K JA 1/6W	1
R160	401 026 1307	CARBON 27K JA 1/6W	1
R161	401 026 4902	CARBON 330K JA 1/6W	1
R162	401 025 5405	CARBON 2.2 JA 1/6W	1
R163	401 025 5405	CARBON 2.2 JA 1/6W	1
R164	401 026 7002	CARBON 3.9K JA 1/6W	1
R165	401 026 9600	CARBON 470 JA 1/6W	1
R166	401 016 4806	CARBON 22K JA 1/4W	1
R167	401 027 0309	CARBON 47K JA 1/6W	1
R168	401 024 7400	CARBON 10K JA 1/6W	1
R169	401 027 5502	CARBON 6.8K JA 1/6W	1
R170	401 024 7400	CARBON 10K JA 1/6W	1
R171	401 027 9005	CARBON 82K JA 1/6W	1
R172	401 026 4902	CARBON 330K JA 1/6W	1
R173	401 025 5405	CARBON 2.2 JA 1/6W	1
R174	401 025 5405	CARBON 2.2 JA 1/6W	1
R175	401 012 8105	CARBON 100K JA 1/4W	1
R176	401 012 8105	CARBON 100K JA 1/4W	1
R177	401 024 7400	CARBON 10K JA 1/6W	1
R178	401 024 7400	CARBON 10K JA 1/6W	1
R179	401 025 1605	CARBON 1.5K JA 1/6W	1
R180	401 025 7409	CARBON 220 JA 1/6W	1
R181	401 015 6504	CARBON 2.2 JA 1/4W	1
R182	401 025 5405	CARBON 2.2 JA 1/6W	1
R183	401 025 5405	CARBON 2.2 JA 1/6W	1
R184	401 012 8105	CARBON 100K JA 1/4W	1

P.C.BOARD PARTS LIST (Continued)

f.	Part No.	Description	Q'ty
5	401 024 7707	CARBON 100K JA 1/6W	1
6	401 024 7707	CARBON 100K JA 1/6W	1
7	401 027 3201	CARBON 560K JA 1/6W	1
8	401 027 3201	CARBON 560K JA 1/6W	1
9	401 025 8703	CARBON 220K JA 1/6W	1
0	401 025 4903	CARBON 180K JA 1/6W	1
1	401 027 0309	CARBON 47K JA 1/6W	1
2	401 026 9907	CARBON 4.7K JA 1/6W	1
3	401 012 7009	CARBON 10K JA 1/4W	1
4	401 024 7400	CARBON 10K JA 1/6W	1
5	401 024 7400	CARBON 10K JA 1/6W	1
6	401 024 7400	CARBON 10K JA 1/6W	1
7	401 024 7400	CARBON 10K JA 1/6W	1
8	401 024 7400	CARBON 10K JA 1/6W	1
9	401 025 7409	CARBON 220 JA 1/6W	1
0	401 027 3201	CARBON 560K JA 1/6W	1
1	401 025 8703	CARBON 220K JA 1/6W	1
2	401 027 2303	CARBON 560 JA 1/6W	1
3	401 025 8208	CARBON 22K JA 1/6W	1
4	401 026 7408	CARBON 39K JA 1/6W	1
5	401 025 8208	CARBON 22K JA 1/6W	1
6	401 027 0309	CARBON 47K JA 1/6W	1
7	401 025 8703	CARBON 220K JA 1/6W	1
8	401 027 8602	CARBON 8.2K JA 1/6W	1
9	401 026 9600	CARBON 470 JA 1/6W	1
10	401 025 0004	CARBON 120K JA 1/6W	1
11	401 025 0004	CARBON 120K JA 1/6W	1
12	401 027 5502	CARBON 6.8K JA 1/6W	1
13	401 024 7400	CARBON 10K JA 1/6W	1
14	401 024 7400	CARBON 10K JA 1/6W	1
15	401 024 7400	CARBON 10K JA 1/6W	1
16	401 024 7400	CARBON 10K JA 1/6W	1
17	401 024 7400	CARBON 10K JA 1/6W	1
18	401 024 7400	CARBON 10K JA 1/6W	1
19	401 024 7400	CARBON 10K JA 1/6W	1
20	401 024 7400	CARBON 10K JA 1/6W	1
21	401 025 8208	CARBON 22K JA 1/6W	1
22	401 016 4806	CARBON 22K JA 1/4W	1
23	401 021 0701	CARBON 56 JA 1/4W	1
24	401 021 0701	CARBON 56 JA 1/4W	1
25	401 025 8208	CARBON 22K JA 1/6W	1
26	401 016 4806	CARBON 22K JA 1/4W	1
27	401 012 7009	CARBON 10K JA 1/4W	1
28	401 020 2003	CARBON 4.7K JA 1/4W	1
29	401 025 3807	CARBON 180 JA 1/6W	1
30	401 026 9303	CARBON 47 JA 1/6W	1
31	401 027 6608	CARBON 75 JA 1/6W	1
32	401 027 5502	CARBON 6.8K JA 1/6W	1
33	401 025 7805	CARBON 2.2K JA 1/6W	1
34	401 024 8001	CARBON 1M JA 1/6W	1
35	402 015 4705	FUSIBLE RES 47 J- 1/4W	1
36	401 024 7004	CARBON 1K JA 1/6W	1
37	401 024 7707	CARBON 100K JA 1/6W	1
38	401 027 0309	CARBON 47K JA 1/6W	1
39	401 026 4902	CARBON 330K JA 1/6W	1
40	402 016 5404	FUSIBLE RES 4.7 J- 1/2W	1
41	402 016 5404	FUSIBLE RES 4.7 J- 1/2W	1
42	402 034 4700	FUSIBLE RES 0.47 J- 1/2W	1
43	402 034 4700	FUSIBLE RES 0.47 J- 1/2W	1
44	402 015 3104	FUSIBLE RES 100 J- 1/4W	1
48	401 024 6700	CARBON 100 JA 1/6W	1
49	401 024 6700	CARBON 100 JA 1/6W	1
SY,PCB,CONTROL			
	620 197 2016	Assy,PCB,Control	1
	620 182 6654	Digitron 12-BT-24GK	1
	620 016 7796	Tact Switch	25
	620 196 0587	Reflector,Mode	1
	620 196 2017	Cushion,Rubber	1
	620 196 1935	Converter,QH3111H0	1
	620 197 2764	Assy,Connector-S,10P	1
	620 197 2771	Assy,Connector-S,11P	1
	620 197 2788	Assy,Connector-S,9P	1
	620 197 2795	Assy,Connector-S,6P	1
	620 197 2801	Assy,Connector-P,2P	1
01	407 102 7706	LED SEL2813A	1
02	407 102 7706	LED SEL2813A	1
03	407 102 7706	LED SEL2813A	1
04	407 102 7706	LED SEL2813A	1

Ref. No.	Part No.	Description	Q'ty
D901	407 005 3805	DIODE DS442-BT	1
D902	407 005 3805	DIODE DS442-BT	1
D903	407 005 3805	DIODE DS442-BT	1
D904	407 005 3805	DIODE DS442-BT	1
D905	407 005 3805	DIODE DS442-BT	1
D906	407 005 3805	DIODE DS442-BT	1
D907	407 005 3805	DIODE DS442-BT	1
D908	407 005 3805	DIODE DS442-BT	1
R901	401 016 4806	CARBON 22K JA 1/4W	1
R902	401 016 4806	CARBON 22K JA 1/4W	1
R903	401 016 4806	CARBON 22K JA 1/4W	1
R904	401 016 4806	CARBON 22K JA 1/4W	1
R905	401 016 4806	CARBON 22K JA 1/4W	1
R906	401 016 4806	CARBON 22K JA 1/4W	1
R907	401 016 4806	CARBON 22K JA 1/4W	1
R908	401 016 4806	CARBON 22K JA 1/4W	1
R909	401 016 4806	CARBON 22K JA 1/4W	1
R910	401 016 4806	CARBON 22K JA 1/4W	1
R911	401 016 4806	CARBON 22K JA 1/4W	1
R912	401 016 4806	CARBON 22K JA 1/4W	1
ASSY,PCB,LED			
52	620 197 2023	Assy,PCB,LED	1
	620 196 0570	Reflector,Disc Set	1
DL801	407 062 7204	LED SEL2213C	1
DL802	407 062 7204	LED SEL2213C	1
DL803	407 062 7204	LED SEL2213C	1
DL804	407 062 7204	LED SEL2213C	1
R801	401 021 0701	CARBON 56 JA 1/4W	1
R802	401 021 0701	CARBON 56 JA 1/4W	1
ASSY,PCB,FILTER			
53	620 202 0136	Assy,PCB,Filter	1
	620 022 2587	EC Terminal 1P	2
	620 196 8873	Filter,LC,AC Line	1
	620 031 4763	Wire Wrap Terminal	3
ASSY,PCB,AUDIO			
54	620 197 2276	Assy,PCB,Audio	1
	411 002 9104	SCR PAN 3X8	2
	620 196 3366	Heat Sink	1
CN12	620 021 6579	Plug 6P	1
CN13	620 021 6555	Plug 4P	1
CN14	620 021 6562	Plug 5P	1
CN15	620 021 1970	Plug 2P	1
CN16	620 021 5923	Plug 3P	1
IP301	620 017 0734	Protector ICP-5	1
IP302	620 017 0734	Protector ICP-5	1
LY301	620 196 1744	Relay,U T-Cross DC24V	1
LY302	620 196 1744	Relay,U T-Cross DC24V	1
L301	620 197 9534	Inductor 100UH K	1
L302	620 197 9534	Inductor 100UH K	1
SC301	620 197 2467	Delay Line,SC-1500	1
SC302	620 200 4501	Delay Line,SC-1500Y	1
VR301	620 006 2343	Potentiometer 100KB	1
VR302	620 006 2343	Potentiometer 100KB	1
XT301	620 197 2160	Resonator,19.7568MHz	1
IC301	409 070 4404	IC NJM2043DD	1
IC302	409 169 7804	IC NJM78M05FA	1
IC303	409 108 6004	IC NJM431L	1
IC304	409 180 3007	IC YM3434	1
IC305	409 183 7903	IC MC74HC14AN	1
IC306	409 052 1407	IC TC74HCU04P	1
IC307	409 052 1407	IC TC74HCU04P	1
IC308	409 171 1500	IC PCM58P	1
IC309	409 171 1500	IC PCM58P	1
IC310	409 180 3205	IC NJM4580D	1
IC311	409 180 3205	IC NJM4580D	1
Q301	405 019 2708	TR 2SC536-F-NP-AA	1
or	405 019 3804	TR 2SC536-G-NP-AA	1
Q302	405 035 7107	TR 2SD1913-R	1
or	405 035 7206	TR 2SD1913-S	1
Q303	405 052 8002	TR 2SB1274-R	1
or	405 052 8101	TR 2SB1274-S	1
Q304	405 027 0505	TR 2SK246-GR	1
Q305	405 027 0505	TR 2SK246-GR	1
Q306	405 034 8808	TR DTC114-EF	1
Q307	405 034 6705	TR DTA114-EF	1
Q308	405 034 8808	TR DTC114-EF	1

P.C.BOARD PARTS LIST (Continued)

Ref. No.	Part No.	Description	Q'ty
Q309	405 034 6705	TR DTA114-EF	1
D301	407 005 8602	DIODE ERA15-02	1
D302	407 005 8602	DIODE ERA15-02	1
D303	407 050 7308	ZENER DIODE GZA8.2Y-BT	1
D304	407 003 5306	DIODE DBA10B	1
D305	407 049 6305	ZENER DIODE GZA12Y-BT	1
D306	407 049 6305	ZENER DIODE GZA12Y-BT	1
D307	407 008 0405	DIODE GMB01-BT	1
D308	407 008 0405	DIODE GMB01-BT	1
D309	407 050 5502	ZENER DIODE GZA5.6Y-BT	1
C301	403 177 1304	ELECT 1U M 50V	1
C302	403 066 2504	MT-POLYEST 0.1U M 250V	1
C303	620 197 2122	Capacitor,3300U,25V,GS	1
C304	620 197 2122	Capacitor,3300U,25V,GS	1
C305	403 177 4800	ELECT 33U M 16V	1
C306	403 177 4800	ELECT 33U M 16V	1
C307	403 177 4909	ELECT 330U M 16V	1
C308	403 177 4909	ELECT 330U M 16V	1
C309	403 177 4800	ELECT 33U M 16V	1
C310	403 001 1906	CERAMIC 0.01U M 16V	1
C311	403 177 4701	ELECT 100U M 16V	1
C312	403 044 0300	ELECT 47U M 16V	1
C313	403 013 7705	CERAMIC 16P J 50V	1
C314	403 013 7705	CERAMIC 16P J 50V	1
C315	403 177 1007	ELECT 100U M 6.3V	1
C316	403 177 4800	ELECT 33U M 16V	1
C317	403 024 1501	CERAMIC 39P J 50V	1
C318	403 024 1501	CERAMIC 39P J 50V	1
C319	403 024 1501	CERAMIC 39P J 50V	1
C320	403 024 1501	CERAMIC 39P J 50V	1
C321	403 177 1403	ELECT 3.3U M 50V	1
C322	403 177 1403	ELECT 3.3U M 50V	1
C323	403 177 1403	ELECT 3.3U M 50V	1
C324	403 177 1403	ELECT 3.3U M 50V	1
C325	403 067 5603	MT-COMPO 0.1U J 50V	1
C326	403 067 5603	MT-COMPO 0.1U J 50V	1
C327	403 177 1403	ELECT 3.3U M 50V	1
C328	403 177 1403	ELECT 3.3U M 50V	1
C329	403 177 4701	ELECT 100U M 16V	1
C330	403 177 4701	ELECT 100U M 16V	1
C331	403 177 1403	ELECT 3.3U M 50V	1
C332	403 177 1403	ELECT 3.3U M 50V	1
C333	403 177 1403	ELECT 3.3U M 50V	1
C334	403 177 1403	ELECT 3.3U M 50V	1
C335	403 177 1403	ELECT 3.3U M 50V	1
C336	403 177 1403	ELECT 3.3U M 50V	1
C337	403 177 1403	ELECT 3.3U M 50V	1
C338	403 093 5806	OS-SOLID 6.8U M 6.3V	1
C339	403 177 5401	POLYPRO 470P J 50V	1
C340	403 177 5401	POLYPRO 470P J 50V	1
C341	403 177 5203	POLYPRO 2000P J 50V	1
C342	403 177 5203	POLYPRO 2000P J 50V	1
C343	403 177 5609	POLYPRO 820P J 50V	1
C344	403 177 5609	POLYPRO 820P J 50V	1
C345	403 177 5302	POLYPRO 0.027U J 50V	1
C346	403 177 5302	POLYPRO 0.027U J 50V	1
C347	403 177 1502	POLYPRO 0.01U J 50V	1
C348	403 177 1502	POLYPRO 0.01U J 50V	1
C349	403 177 5708	NP-ELECT 22U M 16V	1
C350	403 177 5708	NP-ELECT 22U M 16V	1
C351	403 177 4701	ELECT 100U M 16V	1
C352	403 177 4701	ELECT 100U M 16V	1
C353	403 093 5806	OS-SOLID 6.8U M 6.3V	1
C354	403 177 1007	ELECT 100U M 6.3V	1
C355	403 070 7809	CERAMIC 150P K 50V	1
C356	403 001 1906	CERAMIC 0.01U M 16V	1
C357	403 001 1906	CERAMIC 0.01U M 16V	1
C358	403 001 1906	CERAMIC 0.01U M 16V	1
C359	403 001 5805	CERAMIC 0.022U N 16V	1
C360	403 001 5805	CERAMIC 0.022U N 16V	1
R301	401 016 4806	CARBON 22K JA 1/4W	1
R302	401 025 8208	CARBON 22K JA 1/6W	1
R303	401 012 7009	CARBON 10K JA 1/4W	1
R304	401 148 7904	MT-FILM 3K GC 1/4W	1
R305	401 148 7904	MT-FILM 3K GC 1/4W	1
R306	401 148 7904	MT-FILM 3K GC 1/4W	1
R307	401 148 7904	MT-FILM 3K GC 1/4W	1
R308	401 055 3204	OXIDE-MT 180 JA 1/2W	1
R309	401 148 7607	MT-FILM 10K GC 1/4W	1

Ref. No.	Part No.	Description	Q'ty
R310	401 148 7607	MT-FILM 10K GC 1/4W	1
R311	402 015 3005	FUSIBLE RES 10 J- 1/4W	1
R312	402 015 3005	FUSIBLE RES 10 J- 1/4W	1
R313	401 024 8001	CARBON 1M JA 1/6W	1
R314	401 024 6700	CARBON 100 JA 1/6W	1
R315	401 024 6700	CARBON 100 JA 1/6W	1
R316	401 024 6700	CARBON 100 JA 1/6W	1
R317	401 028 0308	CARBON 91K JA 1/6W	1
R318	401 086 5802	MT-FILM 2.7K FA 1/6W	1
R319	401 026 5503	CARBON 360 JA 1/6W	1
R320	401 024 9305	CARBON 1.2K JA 1/6W	1
R321	401 028 0308	CARBON 91K JA 1/6W	1
R322	401 151 0800	MT-FILM 1.6K FA 1/6W	1
R323	401 052 9803	MT-FILM 180 FA 1/6W	1
R324	401 026 8504	CARBON 430 JA 1/6W	1
R325	401 028 0308	CARBON 91K JA 1/6W	1
R326	401 151 0800	MT-FILM 1.6K FA 1/6W	1
R327	401 052 9803	MT-FILM 180 FA 1/6W	1
R328	401 053 3008	MT-FILM 470 FA 1/6W	1
R329	401 028 0308	CARBON 91K JA 1/6W	1
R330	401 151 0800	MT-FILM 1.6K FA 1/6W	1
R331	401 052 9803	MT-FILM 180 FA 1/6W	1
R332	401 053 3008	MT-FILM 470 FA 1/6W	1
R333	401 148 9106	MT-FILM 1K GC 1/4W	1
R334	401 148 9106	MT-FILM 1K GC 1/4W	1
R335	401 018 5801	CARBON 330K JA 1/4W	1
R336	401 018 5801	CARBON 330K JA 1/4W	1
R337	401 148 7904	MT-FILM 3K GC 1/4W	1
R338	401 148 7904	MT-FILM 3K GC 1/4W	1
R339	401 148 8208	MT-FILM 620 GC 1/4W	1
R340	401 148 8208	MT-FILM 620 GC 1/4W	1
R341	401 148 8208	MT-FILM 620 GC 1/4W	1
R342	401 148 8208	MT-FILM 620 GC 1/4W	1
R343	401 148 7706	MT-FILM 1.2K GC 1/4W	1
R344	401 148 7706	MT-FILM 1.2K GC 1/4W	1
R345	401 148 8109	MT-FILM 510 GC 1/4W	1
R346	401 148 8109	MT-FILM 510 GC 1/4W	1
R347	401 012 9300	CARBON 1M JA 1/4W	1
R348	401 012 9300	CARBON 1M JA 1/4W	1
R349	401 148 8000	MT-FILM 47K GC 1/4W	1
R350	401 148 8000	MT-FILM 47K GC 1/4W	1
R351	401 148 7508	MT-FILM 100 GC 1/4W	1
R352	401 148 7508	MT-FILM 100 GC 1/4W	1
ASSY,PCB,AUDIO SUB			
55	620 197 2313	Assy,PCB,Audio Sub	1
TML1	620 182 9075	Pin Plug 3P	1
TML2	620 182 9075	Pin Plug 3P	1
ASSY,PCB,HEADPHONE			
56	620 197 2498	Assy,PCB,Headphone	1
	620 197 2689	Assy,Connector-S,3P	1
	620 197 2719	Assy,Connector-S,4P	1
HP301	620 196 3960	Jack,H/P,6.3D,Gold	1
VR401	620 197 2603	VR,Rotary,2X20KA	1
IC401	409 039 7309	IC NJM4556S	1
C401	403 050 1209	ELECT 2.2U M 50V	1
C402	403 050 1209	ELECT 2.2U M 50V	1
C403	403 044 0300	ELECT 47U M 16V	1
C404	403 044 0300	ELECT 47U M 16V	1
C405	403 067 7706	MT-COMPO 0.047U J 50V	1
C406	403 067 7706	MT-COMPO 0.047U J 50V	1
R401	401 024 7004	CARBON 1K JA 1/6W	1
R402	401 024 7004	CARBON 1K JA 1/6W	1
R403	401 024 7004	CARBON 1K JA 1/6W	1
R404	401 024 7004	CARBON 1K JA 1/6W	1
R405	401 024 9701	CARBON 12K JA 1/6W	1
R406	401 024 9701	CARBON 12K JA 1/6W	1
R407	401 027 0309	CARBON 47K JA 1/6W	1
R408	401 027 0309	CARBON 47K JA 1/6W	1
R409	401 024 6700	CARBON 100 JA 1/6W	1
R410	401 024 6700	CARBON 100 JA 1/6W	1

NOTES:

1. Parts order must contain Model Number, Part Number and Description.
2. Ordering quantity of screws and resistors must be multiple of 10 pcs.

REFERENCE VOLTAGE (CD Main P.C.Board Section)

TRANSISTOR DC VOLTAGES

Ref. No.	DEVICE	B	C	E	Ref. No.	DEVICE	B	C	E	Ref. No.	DEVICE	B	C	E
Q101	2SB598	4.3V	1.6V	4.9V	Q108	2SC536	4.1V	4.9V	3.6V	Q114	2SC3400	0V	4.8V	0V
Q102	2SD1012	0.6V	0V	0V	Q109	2SC3400	2.7V	0V	0V	Q115	2SC3400	0V	4.9V	0V
Q104	UN411-D	0V	4.8V	4.9V	Q110	2SC3400	0V	2.7V	0V	Q116	2SC3400	4.8V	0.2V	0V
Q105	UN421-D	4.8V	−24.4V	−24.4V	Q111	2SA1346	4.8V	4.9V	4.9V					
Q106	2SA608	−0.5V	0V	0V	Q112	2SA1346	0V	4.9V	4.9V			D	G	S
Q107	2SC3400	0V	3.6V	0V	Q113	2SC3400	4.9V	0V	0V	Q103	2SK246	−0.3V	−24.4V	0V

IC PIN NUMBERS DC VOLTAGES

Ref. No.	DEVICE	1	2	3	4	5	6	7	8	9	10	11	12	13	14	15	16	17	18	19	20
IC101	LA9200NM	0V	0V	0V	0V	0V	0V	0V	0V	0.4V	0V	0V	0V	0V	4.9V	0.4V	0.4V	4.2V	0.4V	0.4V	2.9V
		21	22	23	24	25	26	27	28	29	30	31	32	33	34	35	36	37	38	39	40
		0.4V	2.6V	2.2V	2.3V	0V	2.3V	0V	2.4V	2.4V	0V	0.4V	0.4V	0.4V	0V	0.4V	0.4V	0.4V	3.1V	0.4V	4.8V
		41	42	43	44	45	46	47	48	49	50	51	52	53	54	55	56	57	58	59	60
		0V	0V	−5.0V	0.4V	0.4V	0V	0.4V	0V	–	–	–	–	–	–	–	–	–	–	–	–

IC PIN NUMBERS DC VOLTAGES

Ref. No.	DEVICE	1	2	3	4	5	6	7	8	9	10	11	12	13	14	15	16	17	18	19	20
IC102	LC7860J	0V	4.4V	0.5V	2.4V	0V	0.5V	0.5V	0.5V	0.5V	0.4V	0.5V	0.4V	0V	0.5V	0.5V	0.5V	0.5V	0V	0.5V	0.5V
		21	22	23	24	25	26	27	28	29	30	31	32	33	34	35	36	37	38	39	40
		0.5V	0.4V	0V	0V	0V	0V	0.4V	0.4V	0.3V	4.9V	0.5V	5.0V	0.5V	0.4V	0V	0V	0V	0V	4.9V	4.9V
		41	42	43	44	45	46	47	48	49	50	51	52	53	54	55	56	57	58	59	60
		4.9V	0.8V	5.0V	0V	4.9V	0V	0V	0V	5.0V	4.9V	4.9V	5.0V	4.9V	4.9V	0.5V	0V	0V	0V	0V	4.9V
		61	62	63	64	65	66	67	68	69	70	71	72	73	74	75	76	77	78	79	80
		0V	3.3V	0.3V	0.3V	5.0V	0V	5.0V	1.0V	0V	0V	0V	4.9V	5.0V	0V	4.9V	0V	0V	0V	0V	5.0V

IC PIN NUMBERS DC VOLTAGES

Ref. No.	DEVICE	1	2	3	4	5	6	7	8	9	10	11	12	13	14	15	16	17	18	19	20
IC103	LC3517BS	2.3V	2.3V	2.3V	2.3V	1.5V	1.5V	1.5V	1.5V	1.3V	1.3V	1.3V	0V	3.5V	3.4V	3.5V	1.6V	3.6V	0V	2.4V	3.4V
		21	22	23	24	25	26	27	28	29	30	31	32	33	34	35	36	37	38	39	40
		4.4V	2.3V	2.3V	4.9V	–	–	–	–	–	–	–	–	–	–	–	–	–	–	–	–

IC PIN NUMBERS DC VOLTAGES

Ref. No.	DEVICE	1	2	3	4	5	6	7	8	9	10	11	12	13	14	15	16	17	18	19	20
IC104	LC6538D	−7.2V	−17.4V	−24.4V	−24.4V	−23.9V	−24.4V	−24.4V	−24.5V	−24.5V	−24.5V	−24.4V	−24.5V	−24.4V	−24.5V	5.0V	1.9V	2.1V	0V	0V	5.0V
		21	22	23	24	25	26	27	28	29	30	31	32	33	34	35	36	37	38	39	40
		0V	4.3V	0V	3.2V	0V	0V	0V	0V	0V	0.3V	0V	0V	0V	0V	0.3V	5.0V	0V	5.0V	5.0V	0V
		41	42	43	44	45	46	47	48	49	50	51	52	53	54	55	56	57	58	59	60
		0V	0V	0V	5.0V	4.7V	0V	0V	5.0V	0V	4.8V	0.6V	0V	3.4V	−7.0V	−6.8V	10.9V	−6.8V	−6.5V	−1.2V	−3.5V
		61	62	63	64	65	66	67	68	69	70	71	72	73	74	75	76	77	78	79	80
		−3.4V	−27.5V	−1.5V	−3.0V	–	–	–	–	–	–	–	–	–	–	–	–	–	–	–	–

IC PIN NUMBERS DC VOLTAGES

Ref. No.	DEVICE	1	2	3	4	5	6	7	8	9	10	11	12	13	14	15	16	17	18	19	20
IC105	LA6510	0V	0V	0V	0V	−15.8V	0V	0V	0V	0V	14.8V	–	–	–	–	–	–	–	–	–	–
IC106	LA6510	0V	0V	0V	0V	−15.8V	0V	0V	0V	0V	14.8V	–	–	–	–	–	–	–	–	–	–
IC107	RC4558D	0V	0.6V	1.3V	−7.0V	0V	0V	0V	7.1V	–	–	–	–	–	–	–	–	–	–	–	–
IC108	RC4558D	−1.9V	0.3V	0.3V	−7.0V	0V	0V	0V	7.1V	–	–	–	–	–	–	–	–	–	–	–	–
IC109	RC4558D	5.5V	5.5V	5.5V	−6.3V	2.7V	2.7V	5.5V	11.0V	–	–	–	–	–	–	–	–	–	–	–	–
IC110	YM3613B	4.8V	0V	2.1V	1.0V	0.6V	4.1V	2.0V	1.7V	2.3V	0V	4.0V	0V	4.8V	0V	0V	0V	0V	2.4V	2.2V	1.8V
		21	22	23	24	25	26	27	28	29	30	31	32	33	34	35	36	37	38	39	40
		0V	0V	1.2V	4.7V	–	–	–	–	–	–	–	–	–	–	–	–	–	–	–	–
IC111	MC74HC08	2.4V	2.4V	2.4V	1.8V	1.8V	2.2V	0V	0V	4.8V	0V	0V	0V	0V	4.8V	–	–	–	–	–	–
IC112	MC74HC74	0V	2.1V	2.0V	4.8V	0V	4.8V	0V	4.8V	0V	4.8V	4.8V	4.8V	4.9V	4.8V	–	–	–	–	–	–
IC113	MC74HC04	4.8V	0V	2.1V	2.1V	2.1V	2.0V	0V	0V	4.8V	0V	4.8V	0V	4.8V	4.8V	–	–	–	–	–	–
IC114	MC74HC04	4.8V	0V	4.2V	0V	0V	4.9V	0V	4.8V	0V	0.5V	4.4V	4.4V	0.7V	4.9V	–	–	–	–	–	–
IC115	MC7805CT	10.3V	0V	4.9V	–	–	–	–	–	–	–	–	–	–	–	–	–	–	–	–	–
IC116	MC78L05A	5.0V	0V	10.3V	–	–	–	–	–	–	–	–	–	–	–	–	–	–	–	–	–
IC117	NJM78L07A	7.1V	0V	10.2V	–	–	–	–	–	–	–	–	–	–	–	–	–	–	–	–	–
IC118	MC79L05ACP	0V	−11.7V	−5.0V	–	–	–	–	–	–	–	–	–	–	–	–	–	–	–	–	–
IC119	NJM79L07A	0V	−11.7V	−7.0V	–	–	–	–	–	–	–	–	–	–	–	–	–	–	–	–	–

CD MAIN P.C.BOARD
(BOTTOM VIEW)

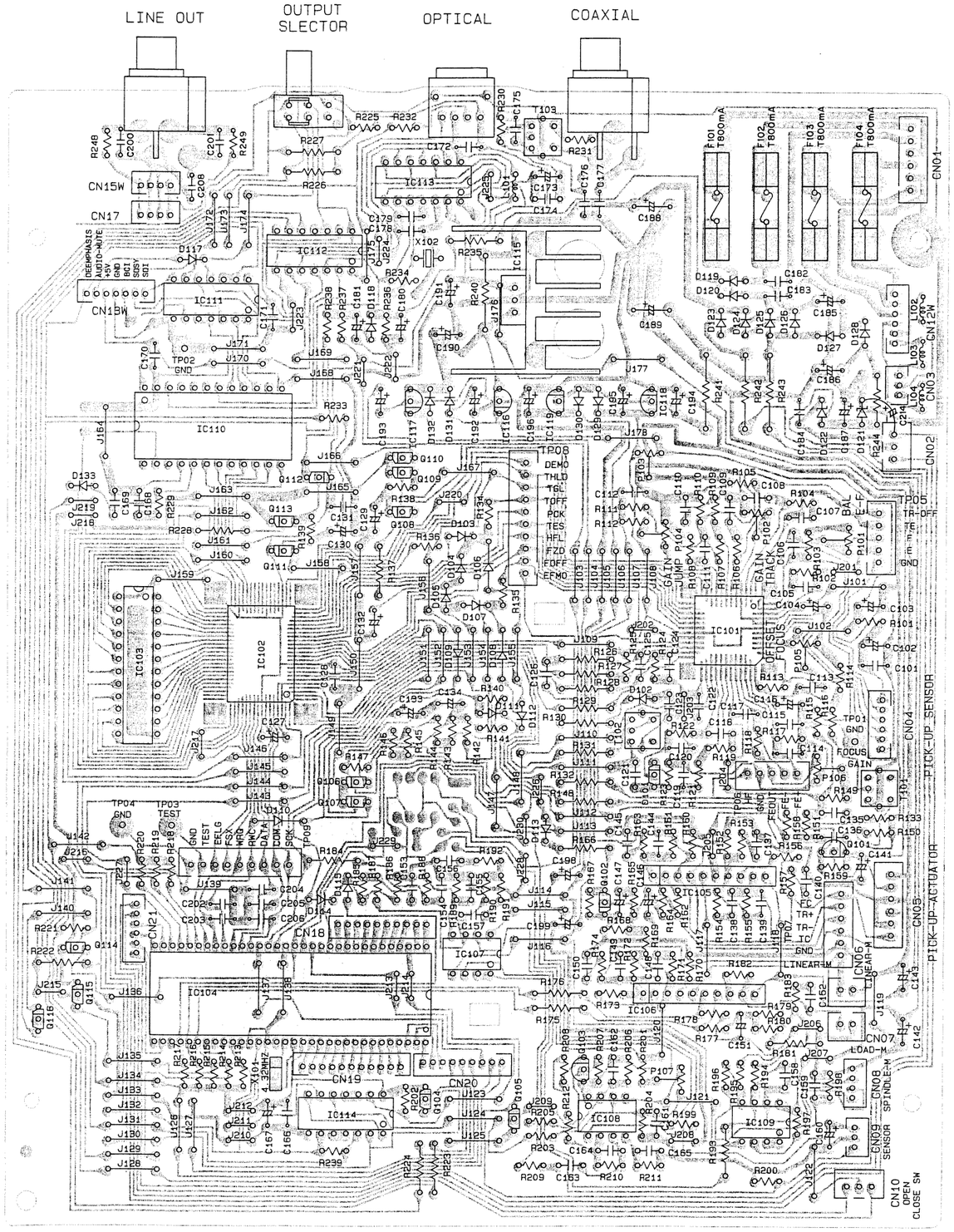

AUDIO P.C.BOARD
(BOTTOM VIEW)

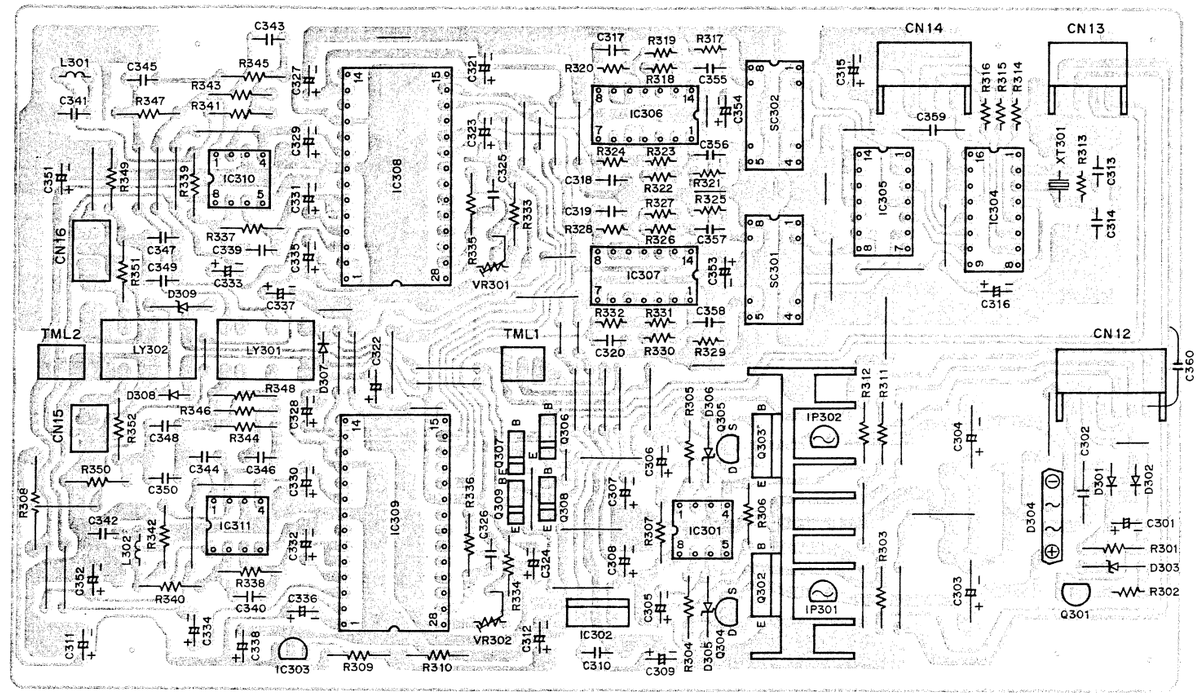

REFERENCE VOLTAGE (Audio P.C.Board Section)

TRANSISTOR DC VOLTAGES

Ref. No.	DEVICE	B	C	E	Ref. No.	DEVICE	B	C	E	Ref. No.	DEVICE	D	G	S
Q301	2SC536	0.6V	0V	0V	Q307	DTA114	0V	– 12.0V	12.2V	Q304	2SK246	16.5V	12.9V	12.9V
Q302	2SD1913	12.9V	16.5V	12.2V	Q308	DTC114	0V	12.2V	0V	Q305	2SK246	– 12.7V	– 17.3V	– 17.3V
Q303	2SB1274	– 12.7V	– 17.3V	– 12.1V	Q309	DTA114	0V	0V	12.2V					
Q306	DTC114	0V	12.1V	0V										

IC PIN NUMBERS DC VOLTAGES

Ref. No.	DEVICE	1	2	3	4	5	6	7	8	9	10	11	12	13	14	15	16	17	18	19	20
IC301	NJM2043	– 3.2V	0V	0V	– 12.1V	0V	0V	4.4V	12.2V	–	–	–	–	–	–	–	–	–	–	–	–
IC302	NJM78M05	5.0V	0V	12.2V	–	–	–	–	–	–	–	–	–	–	–	–	–	–	–	–	–
IC303	NJM431L	2.4V	0V	5.0V	–	–	–	–	–	–	–	–	–	–	–	–	–	–	–	–	–
IC304	YM3434	3.0V	2.3V	2.2V	4.8V	2.2V	2.4V	0V	4.8V	0.1V	0.1V	2.4V	1.1V	0V	4.8V	4.8V	1.4V	–	–	–	–
IC305	MC74HC14	1.1V	3.2V	2.4V	2.4V	0.1V	4.6V	0V	4.6V	0.1V	0V	4.8V	0V	4.8V	4.8V	–	–	–	–	–	–
IC306	TC74HCU04	2.5V	2.4V	1.7V	4.7V	4.7V	2.5V	0V	1.5V	4.3V	4.3V	1.9V	2.6V	2.5V	5.0V	–	–	–	–	–	–
IC307	TC74HCU04	2.5V	2.4V	1.7V	4.7V	4.7V	2.5V	0V	1.5V	4.3V	4.3V	1.9V	2.6V	2.5V	5.0V	–	–	–	–	–	–
IC308,309	PCM58P	1.9V	5.0V	– 5.9V	3.2V	0V	0V	0V	0V	– 12.0V	0V	0V	0V	5.0V	0V	3.2V	1.5V	2.5V	0V	0.2V	– 12.0V
		21	**22**	**23**	**24**	**25**	**26**	**27**	**28**	**29**	**30**	**31**	**32**	**33**	**34**	**35**	**36**	**37**	**38**	**39**	**40**
		0V	0V	0V	– 10.9V	– 11.0V	– 11.0V	– 11.1V	– 10.2V	–	–	–	–	–	–	–	–	–	–	–	–
IC310	NJM4580	0V	0V	0V	– 12.1V	0V	0V	0V	12.2V	–	–	–	–	–	–	–	–	–	–	–	–
IC311	NJM4580	0V	0V	0V	– 12.1V	0V	0V	0V	12.2V	–	–	–	–	–	–	–	–	–	–	–	–

CONTROL P.C.BOARD
(BOTTOM VIEW)

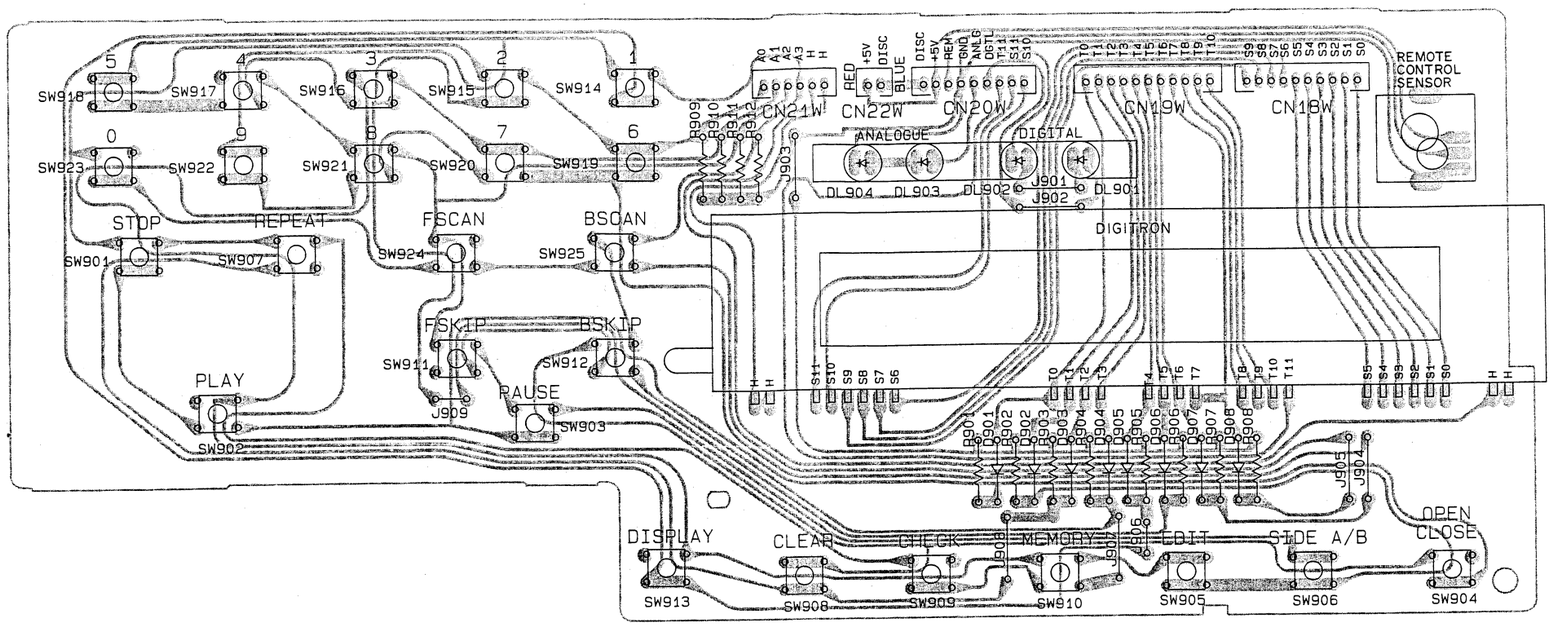

FILTER P.C.BOARD
(BOTTOM VIEW)

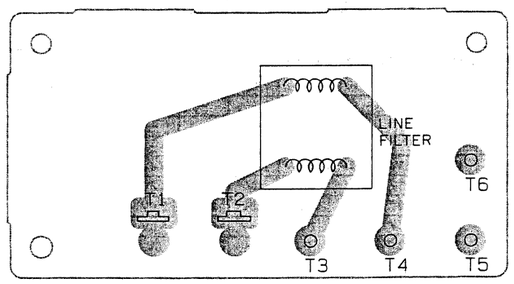

LED P.C.BOARD
(BOTTOM VIEW)

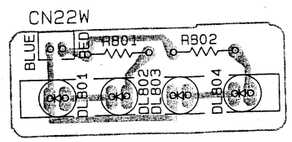

HEADPHONE P.C.BOARD
(BOTTOM VIEW)

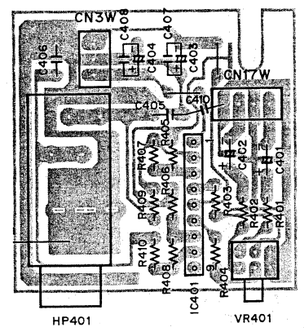

WIRING DIAGRAM

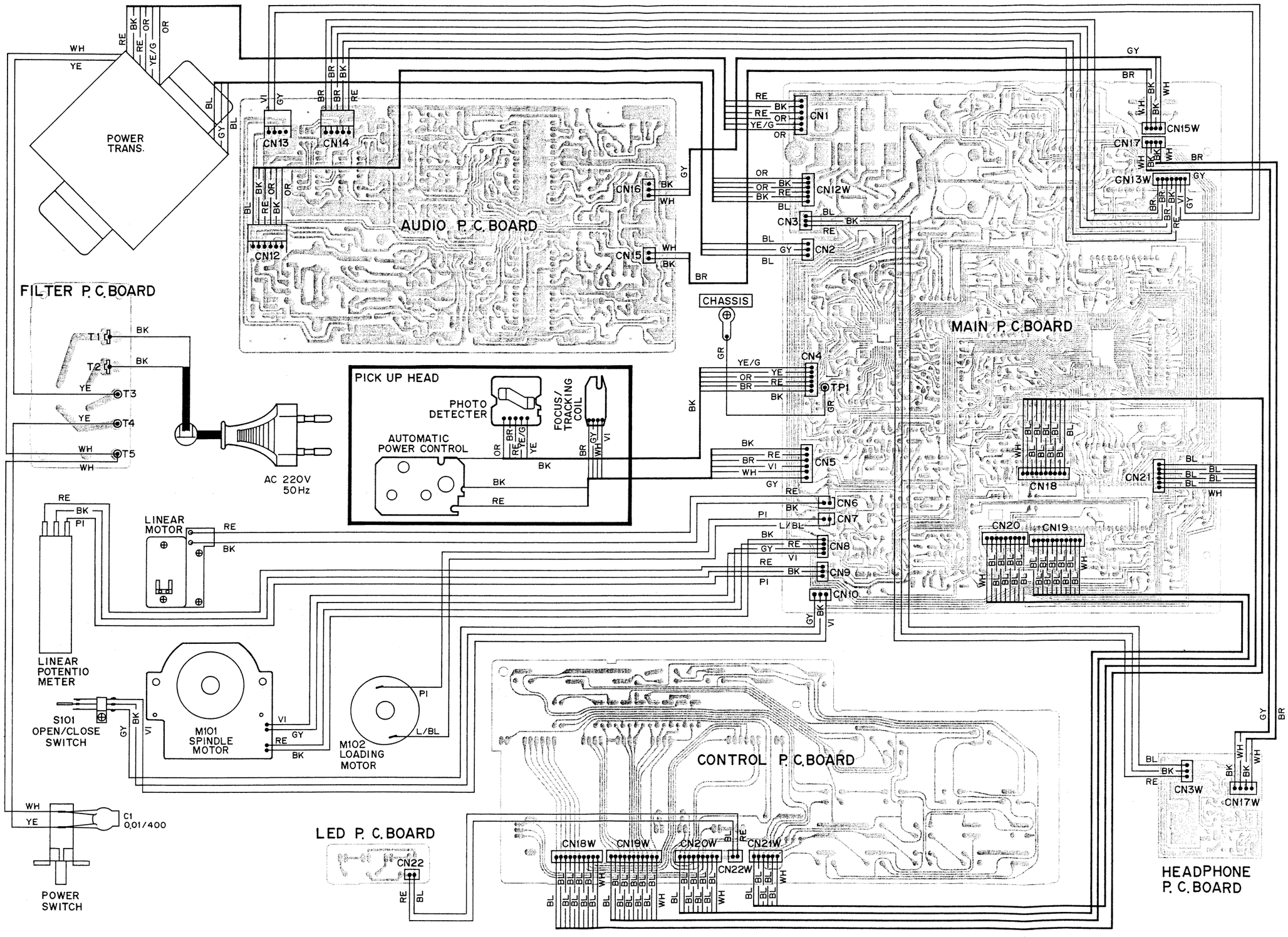

SCHEMATIC DIAGRAM (Main P.C.Board Section)

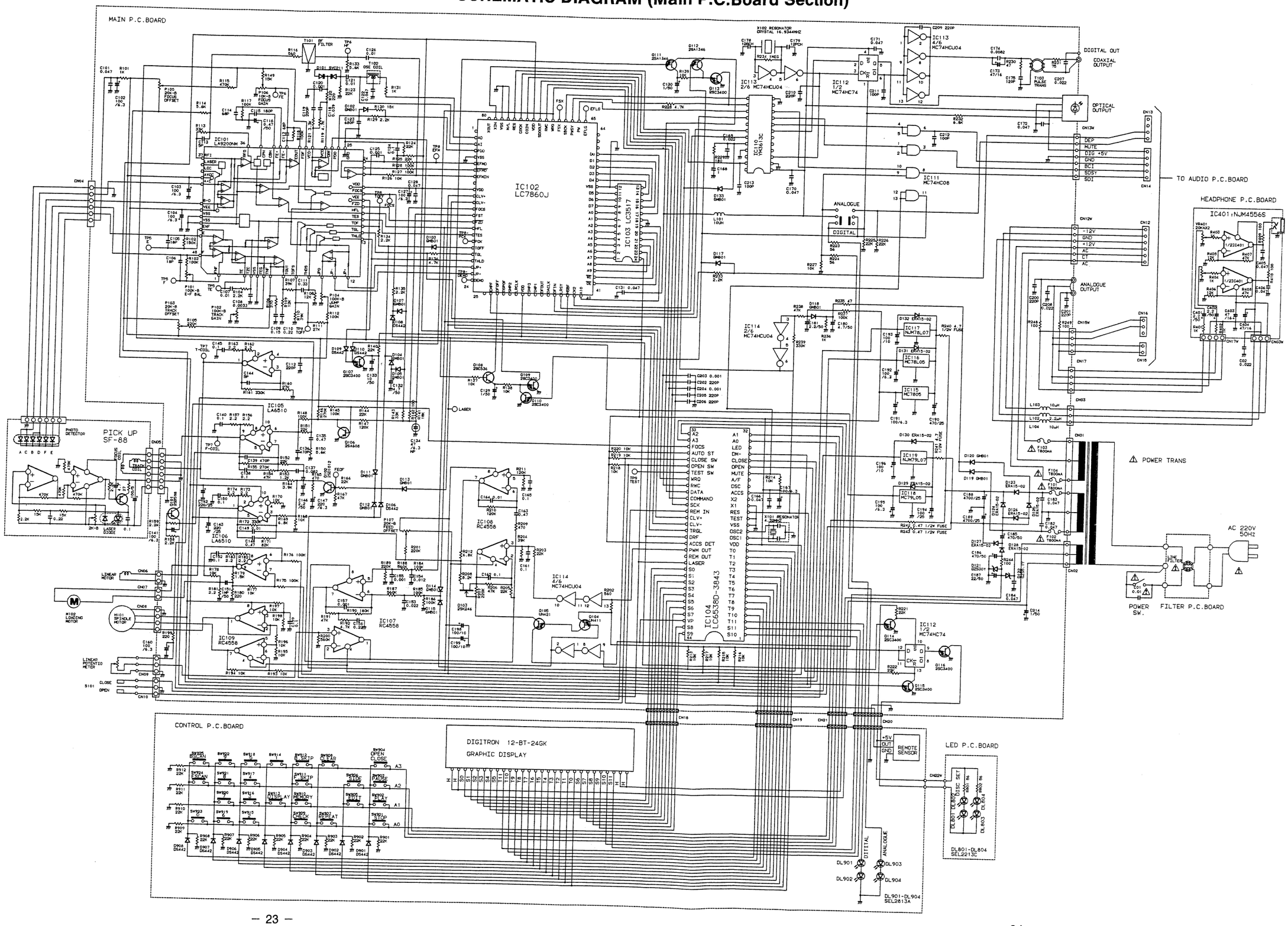

SCHEMATIC DIAGRAM (Audio P.C.Board Section)

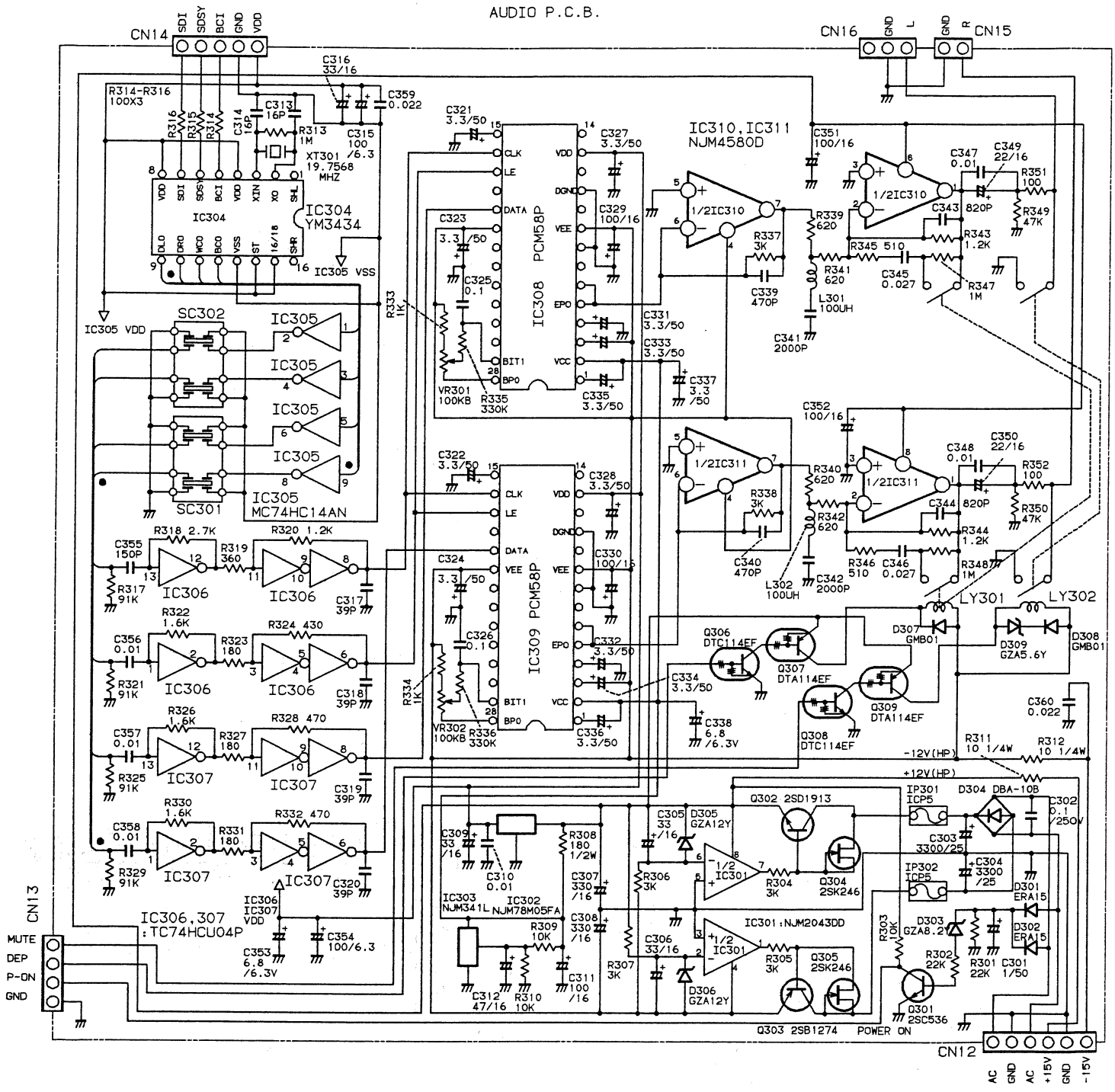

IC BLOCK DIAGRAM

LC6538D-3843 BLOCK DIAGRAM

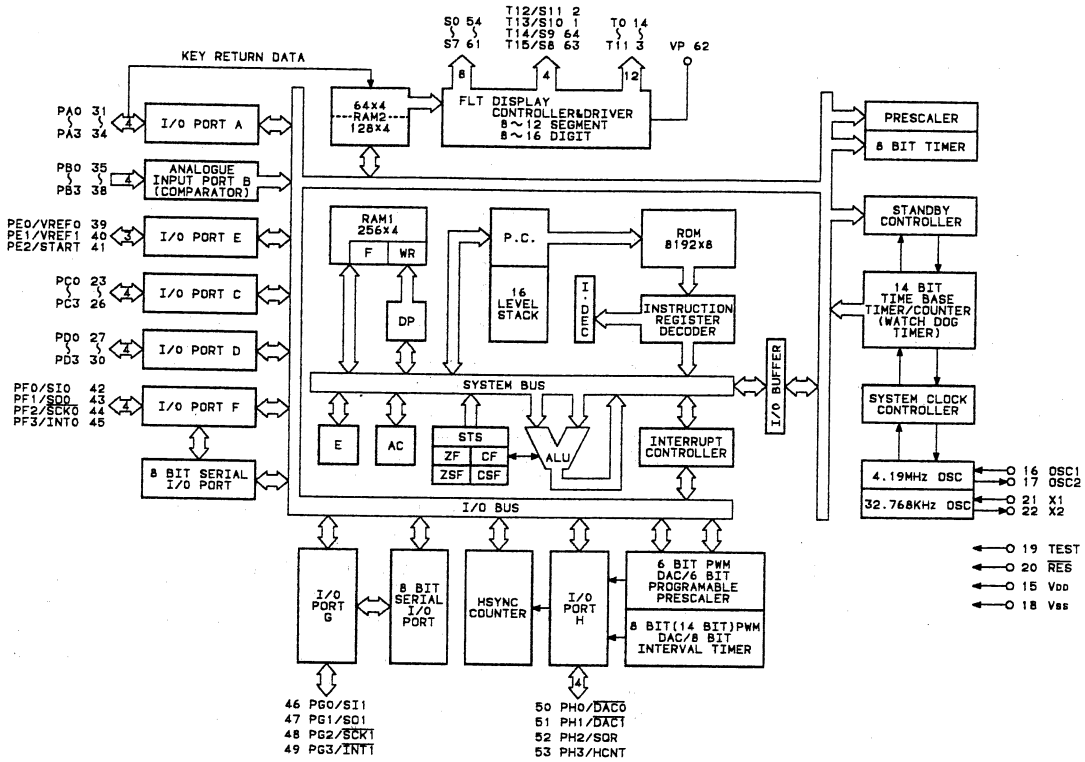

YM3613C BLOCK DIAGRAM

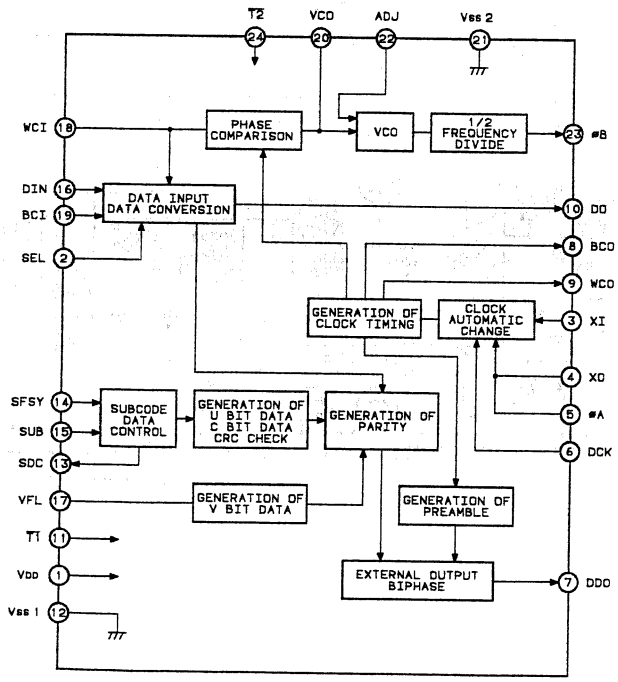

YM3434 BLOCK DIAGRAM

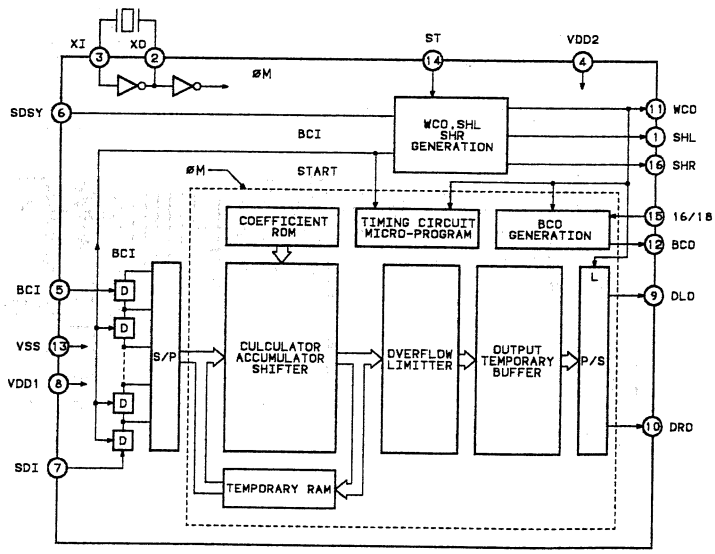

IC BLOCK DIAGRAM (Continued)

LA9200NM BLOCK DIAGRAM

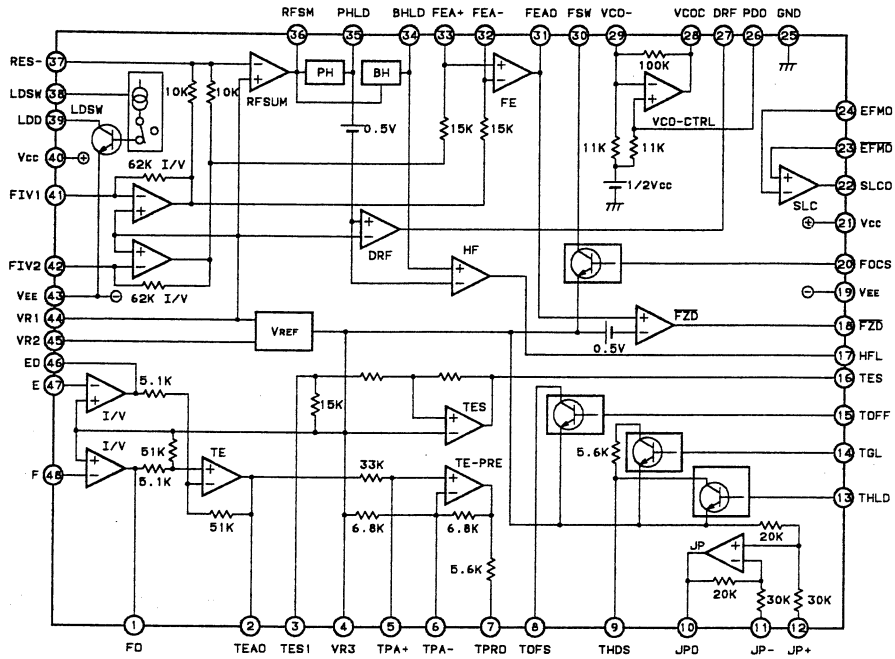

LC7860J BLOCK DIAGRAM

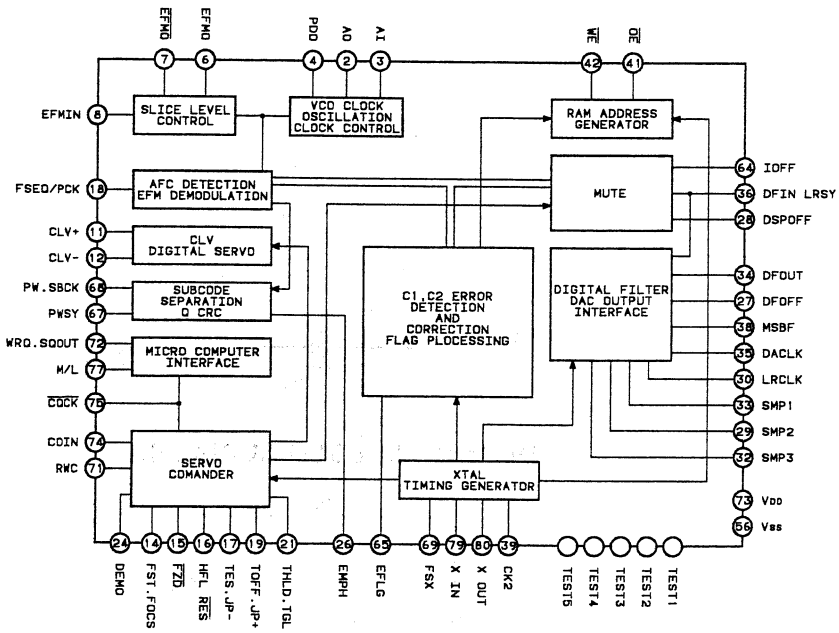

NJM4580D BLOCK DIAGRAM

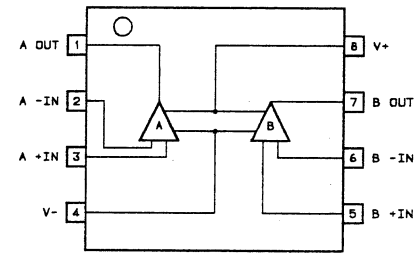

RC4558D BLOCK DIAGRAM

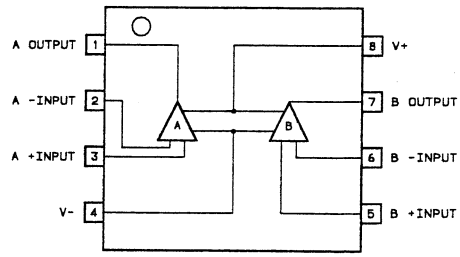

IC BLOCK DIAGRAM (Continued)

LC3517BS-15 BLOCK DIAGRAM

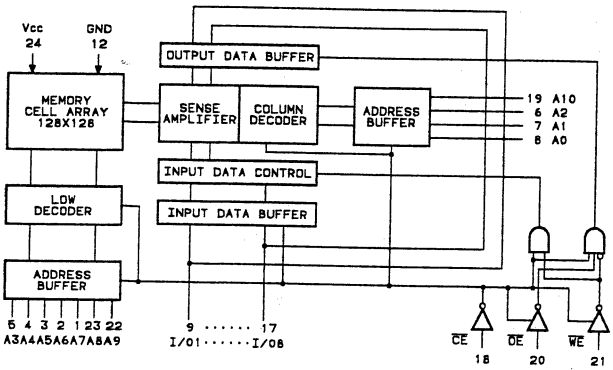

NJM78L07A BLOCK DIAGRAM

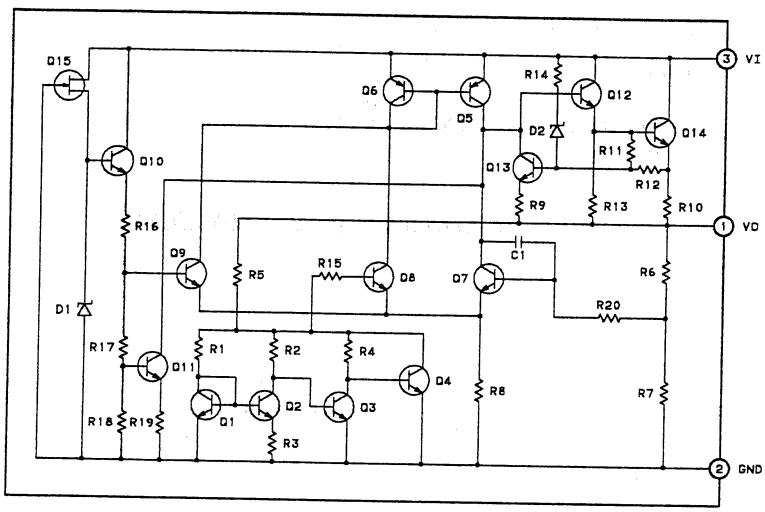

NJM431L BLOCK DIAGRAM

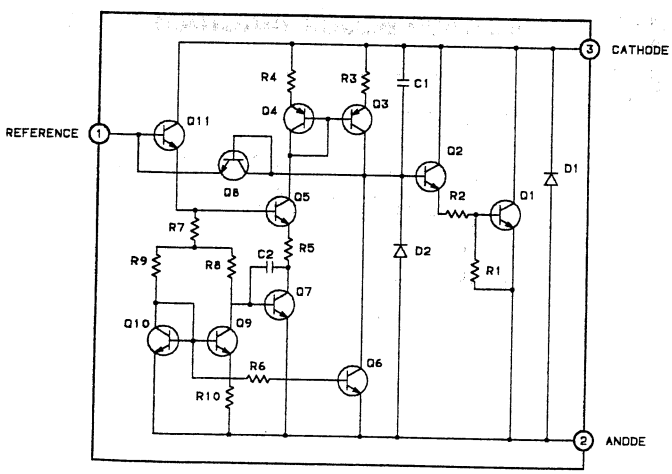

NJM4556S BLOCK DIAGRAM

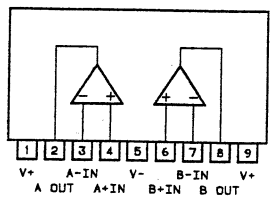

LA6510 BLOCK DIAGRAM

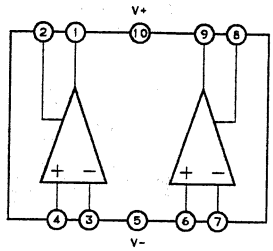

MC74HC74AN BLOCK DIAGRAM

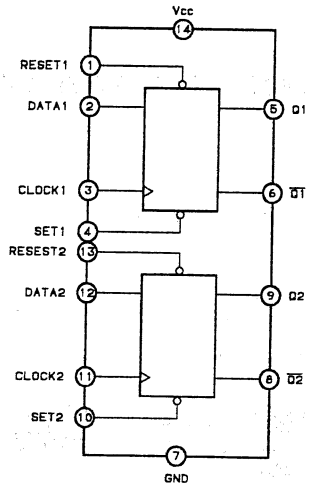

MC74HC08AN BLOCK DIAGRAM

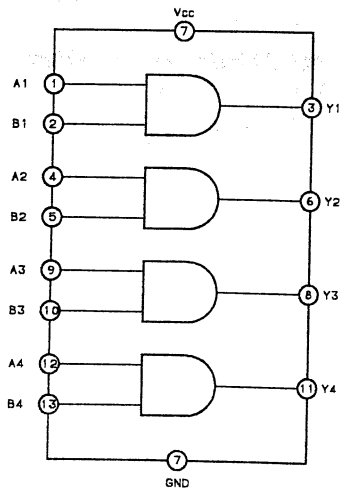

IC BLOCK DIAGRAM (Continued)

MC74HCU04N BLOCK DIAGRAM

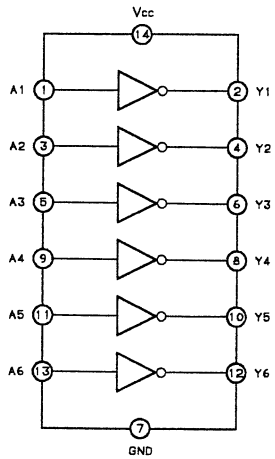

NJM79L07A BLOCK DIAGRAM

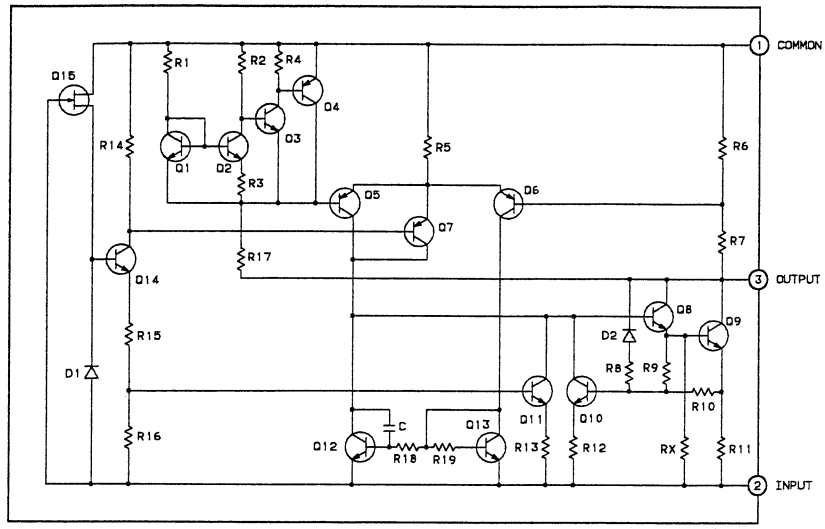

MC7805CT BLOCK DIAGRAM

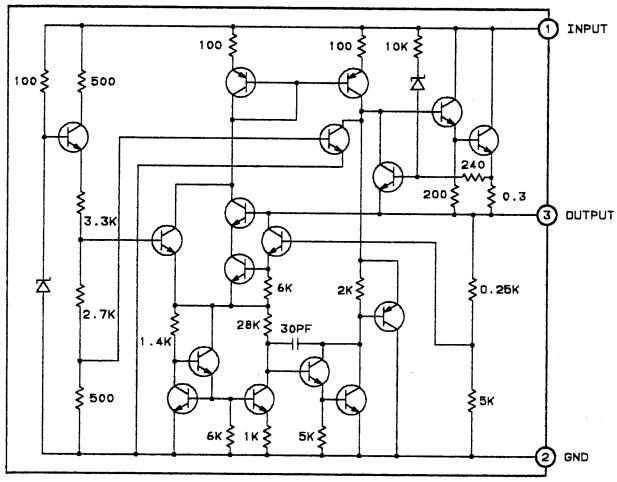

MC78L05ACP BLOCK DIAGRAM

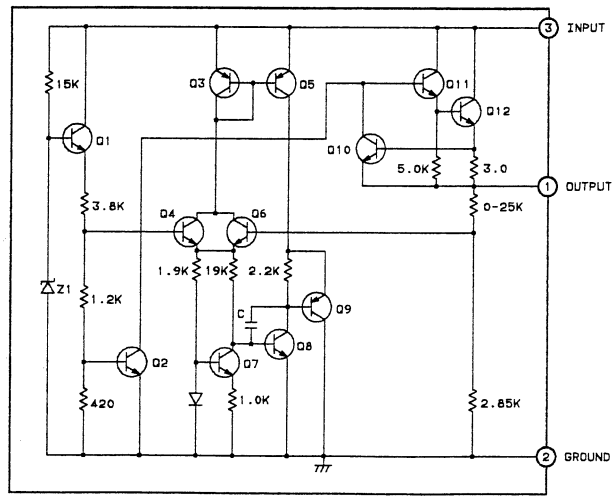

IC BLOCK DIAGRAM (Continued)

MC79L05ACP BLOCK DIAGRAM

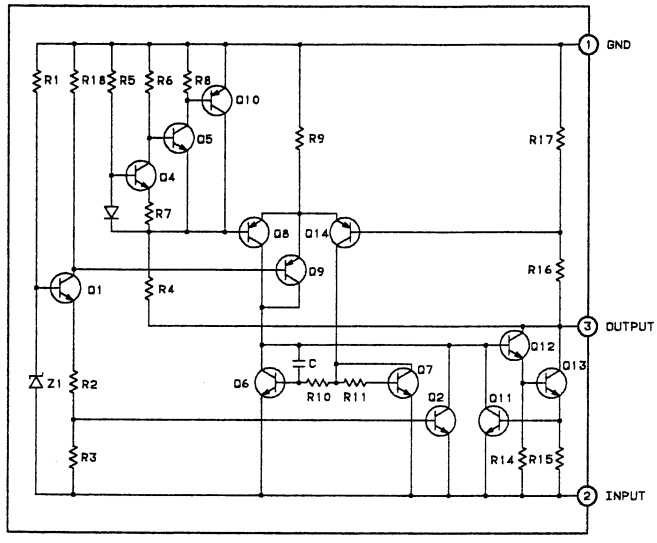

NJM78M05FA BLOCK DIAGRAM

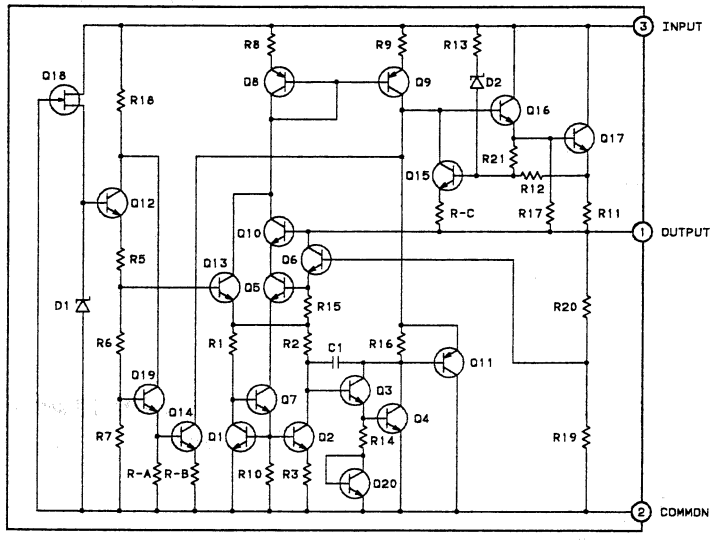

IC & TRANSISTOR LEAD IDENTIFICATION

TRANSISTOR	FRONT VIEW	BOTTOM VIEW	TRANSISTOR	FRONT VIEW	BOTTOM VIEW
2SB598 2SC536	ECB	ECB	DTA114 DTC114	E C B	E C B
UN411 UN421	ECB	ECB	2SB1274 2SD1913	BCE	BCE
2SA1346 2SA608 2SC3400 2SC536 2SD1012	ECB	ECB	2SK246	SGD	SGD
TERMINAL NAME					
B → BASE C → COLLECTOR E → EMITTER			S → SOURCE G → GATE D → DRAIN		

NJM4580D TOP VIEW
RC4558D TOP VIEW

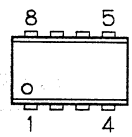

MC74HCU04N TOP VIEW
MC74HC08AN TOP VIEW
MC74HC74AN TOP VIEW

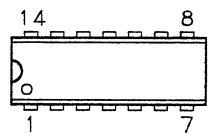

YM3434 TOP VIEW

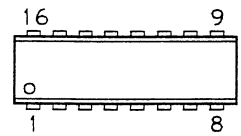

LC3517BS-15 TOP VIEW

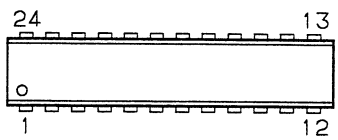

NJM4556S FRONT/SIDE VIEWS

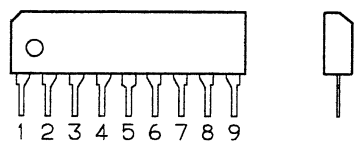

LA6510 FRONT/SIDE VIEWS

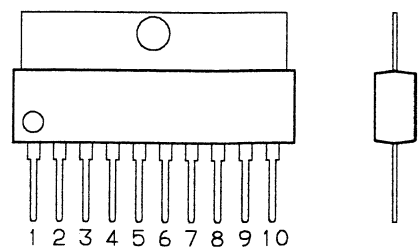

IC & TRANSISTOR LEAD IDENTIFICATION (Continued)

LA9200NM TOP/SIDE VIEWS

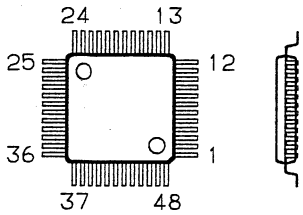

LC7860J TOP/SIDE VIEWS

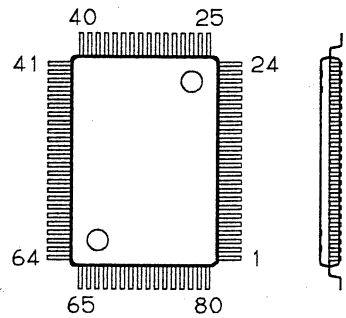

YM3613C TOP VIEW

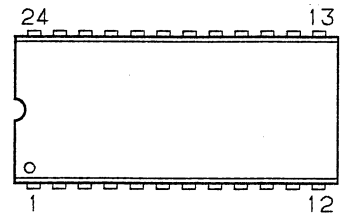

PCM58P TOP VIEW

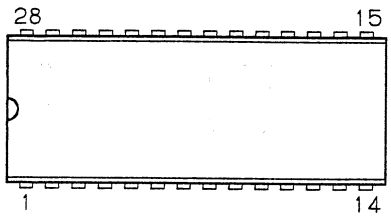

LC6538D-3843 TOP VIEW

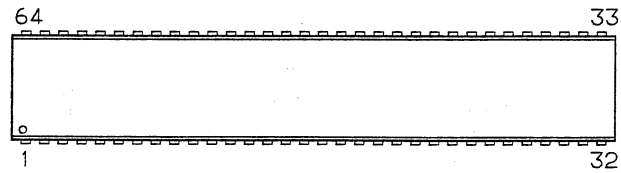

MC78L05ACP TOP/SIDE VIEWS
MC79L05ACP TOP/SIDE VIEWS
NJM431L TOP/SIDE VIEWS
NJM78L07A TOP/SIDE VIEWS
NJM79L07A TOP/SIDE VIEWS

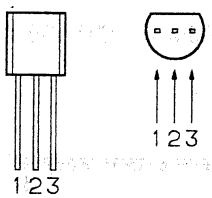

NJM78M05FA TOP/SIDE VIEWS

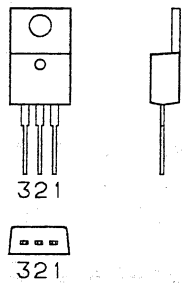

MC7805CT TOP/SIDE VIEWS

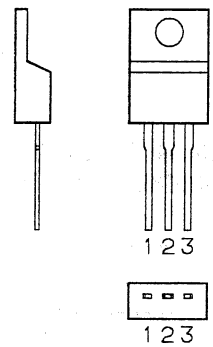

September/'89/1,200/H **Printed in Japan**

FISHER Hi-Fi Europa Vertriebs GmbH
Stahlgruberring 4
8000 München 82
Tel: 089/420 45-0
Tlx: 524033